Product Catalog

2026-2027

PRODUCT OVERVIEW

SOLAR 08 - 15



Baikal
08



Moon
10



Annecy
11



Meribel
11



Teal
12



Narlay
13



Juniper
13



Tortoise
14



Amistad
15

WALL WASHERS 18 - 21



Flow
18



Acadia Mini
18



Acadia
19



Acadia Mega
19



Crest Peak
21



Crest Range
21

PRODUCT OVERVIEW

OUTDOOR

24 - 56



Allatoona
24



Folsom
25



Barton
25



Calenia
26



Oneida
27



Louise
28



Athabasca
29



Zar
30



Isabella
31



Caddo
32



Annie
33



Caror
34



Winona
35



Niskey
36



Flathead
37



Blue
38



Blue
38



Blue
39



Kentucky
40



Silver
41



Maroon
42



Horseshoe
43



Salmon
44



Mono
45



George
46



Willoughby
47



Powell
48



Michigan
49



Candler
50



Winnipeg
51



Reindeer
52



Chelan
53



Eklutna
54



Ouachita
55



Norman
56

PRODUCT OVERVIEW

OUTDOOR 57 - 90



Havasu
57



Palmyra
58



Elarbee
59



Monument
60



Cowart
61



Yellowstone
62



Lanier
63



Gio
64



Martin
65



Martin
66



Emerald
67



Evelyn
68



Evelyn
69



Geneva Mega
70



Geneva
71



Rabun
72



Redwood
73



Wildwood
74



Clear
75



Echo
76



Erie
77



Crescent
78



Wilson
79



Klamath Mega
80



Klamath
81



Jocassee
82



Echo
83



Torch
84



Champlain
85



Torch
86



Keowee
87



Wabash
88



Wabash
89



Wabash
89



Canyon
90

PRODUCT OVERVIEW

OUTDOOR 91 - 103


Shasta
91


Shasta
91


Keowee
92


Pueblo
93


Avalanche
94


Avalanche
94


Avalanche
95


Redfish
96


Redfish
97


Redfish
97


Redfish
97


Shafer
98


Jay
99


Tennessee
100


Mercury
101


Geneva
102


Erling
103


LIGHTING

SOLAR

BAIKAL

Λεπτομέρειες | Details

Black **80207310 S**

Material	ABS & PC
Power	LED 1W
Battery	3,7V
Duration	10-12 h
Charging time	6-8 h
Dimming	No
Colour temperature	3000K | 4000K | 6000K
Lumen	100
Classification	IP65
Dimensions	130 x 190 x 175 mm



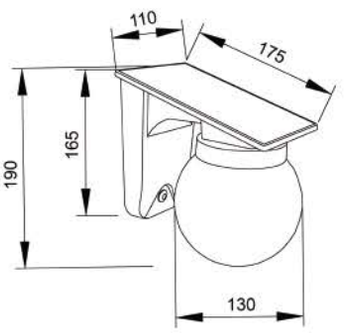

26-31-50

3CCT CHANGING COLOR





MOON

Λεπτομέρειες | Details

Black **80206810 S**

Material	ABS & PC
Power	LED 0,8W
Battery	1,2V
Duration	6-8 h
Charging time	5-6 h
Dimming	No
Colour temperature	2700K | 6500K
Lumen	50
Classification	IP65
Dimensions	120 x 75 x 41 mm





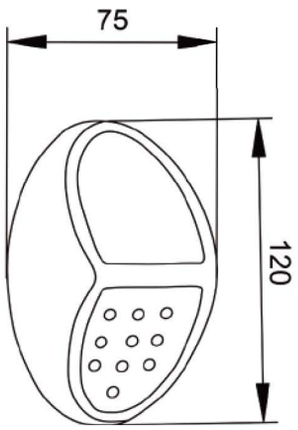

26-08-90



ANNECY

Λεπτομέρειες | Details

Black **80206910 S**

Material	ABS & PC
Power	LED 2W
Battery	3,7V
Duration	8-10 h
Charging time	5-6 h
Dimming	Yes (3 step)
Colour temperature	2700K | 6500K
Lumen	500
Classification	IP65
Dimensions	160 x 82 x 29 mm

26-44-00





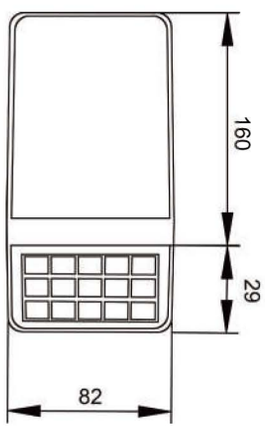

MERIBEL

Λεπτομέρειες | Details

Black **80207011 S**

Material	ABS & PC
Power	LED 2W
Battery	3,7V
Duration	8-10 h
Charging time	6-8 h
Dimming	No
Colour temperature	3000K
Lumen	220
Classification	IP65
Dimensions	135 x 100 x 50 mm

26-23-50





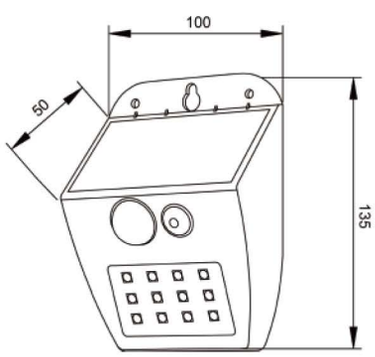

TEAL

Λεπτομέρειες | Details

Black **80207111 S**

by controller



Material	ABS & PC
Power	LED 10W
Battery	3,7V
Duration	8-10 h
Charging time	6-8 h
Dimming	Yes
Colour temperature	3000K & RGB (by controller)
Lumen	1200
Classification	IP65
Dimensions	255 x 181 mm

26-49-50



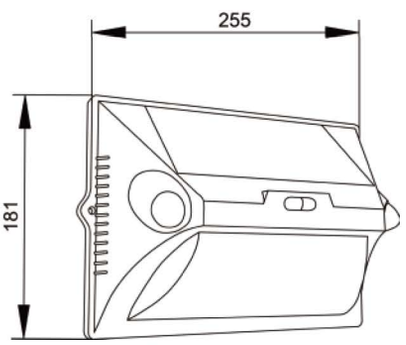



NARLAY

Λεπτομέρειες | Details

Black **80206611 S**

Material	ABS & PC
Power	LED 8W
Battery	3,7V
Duration	8-10 h
Charging time	6-8 h
Dimming	YES (3 step)
Colour temperature	3000K
Lumen	800
Classification	IP65
Dimensions	260 x 117 x 92 mm

26-36-50





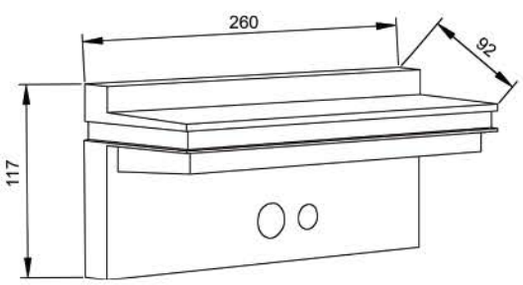

JUNIPER

Λεπτομέρειες | Details

Black **80206711 S**

Material	ABS & PC
Power	LED 8W
Battery	3,7V
Duration	8-10 h
Charging time	6-8 h
Dimming	Yes (3 step)
Colour temperature	3000K
Lumen	800
Classification	IP65
Dimensions	222 x 163 x 91 mm

26-37-50





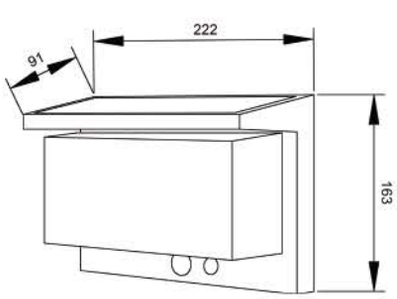

TORTOISE



Λεπτομέρειες | Details

Black **80207211 S**

Material	ABS & PC
Power	LED 6W
Battery	3,7V
Duration	8-10 h
Charging time	6-8 h
Dimming	No
Colour temperature	3000K
Lumen	500
Classification	IP65
Dimensions	160 x 160 x 60 mm

26-43-00



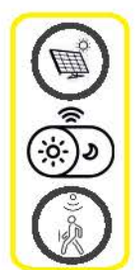

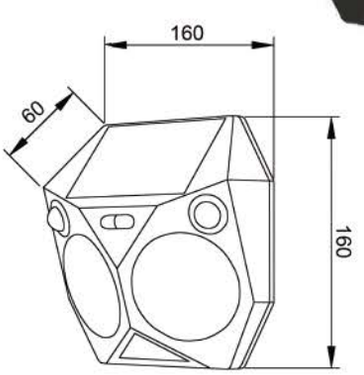

AMISTAD

Λεπτομέρειες | Details

Black **80204910 S**

Material	PC
Power	LED 2W
Battery	5,5V
Duration	8-10 h
Charging time	6-8 h
Dimming	No
Colour temperature	RGB
Lumen	180
Classification	IP65
Dimensions	360 x 84 x 92 mm

26-16-80





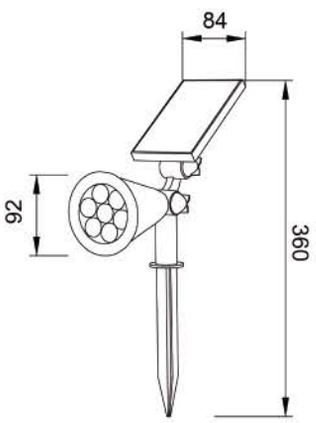








LIGHTING

WALL WASHERS

ACADIA MINI



Λεπτομέρειες | Details

Silver **80700115**

Material	Aluminum & PC
Power	LED 12W
Dimming	No
Colour temperature	2700K | 6500K & RGB by controller
Lumen	1320
Classification	IP65
Dimensions	40 x 50 x 300 mm





26-68-50

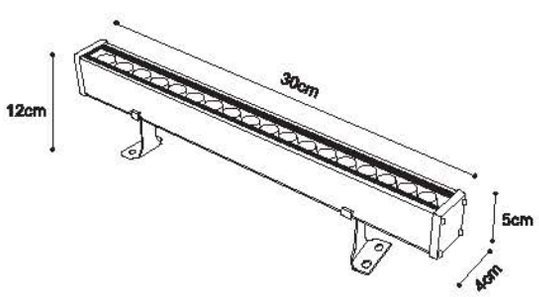

Extra 80700C

RGB & CCT controller

ACADIA

Λεπτομέρειες | Details

Silver **80700215**



Material	Aluminum & PC
Power	LED 24W
Dimming	No
Colour temperature	2700K | 6500K & RGB by controller
Lumen	2640
Classification	IP65
Dimensions	40 x 50 x 600 mm



26-80-00

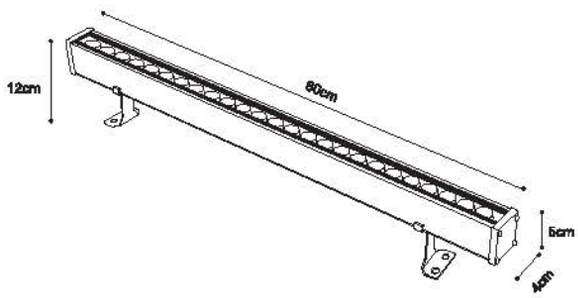

Extra 80700C

RGB & CCT controller

ACADIA MEGA

Λεπτομέρειες | Details

Silver ***Extra* 80700315**



Material	Aluminum & PC
Power	LED 48W
Dimming	No
Colour temperature	2700K | 6500K & RGB by controller
Lumen	3960
Classification	IP65
Dimensions	40 x 50 x 1000 mm



26-101-00

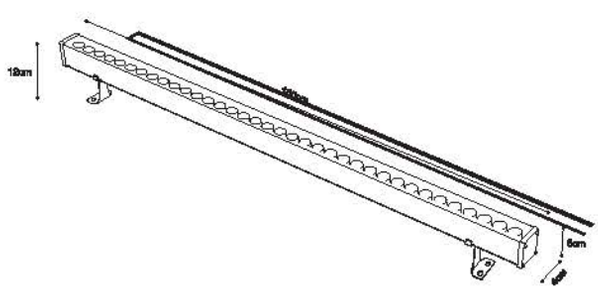

Extra 80700C

RGB & CCT controller







CREST PEAK

Λεπτομέρειες | Details

Black **80700415**

Material	Aluminum & PC
Power	LED 7W
Dimming	No
Colour temperature	2700K | 6500K & RGB by controller
Lumen	770
Classification	IP65
Dimensions	120 mm Ø85 mm



Extra 80700C

RGB & CCT controller



26-54-50

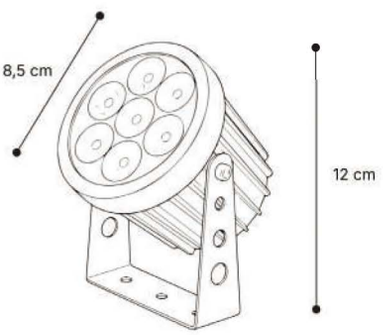

CREST RANGE

Λεπτομέρειες | Details

Black **80700515**

Material	Aluminum & PC
Power	LED 12W
Dimming	No
Colour temperature	2700K | 6500K & RGB by controller
Lumen	1320
Classification	IP65
Dimensions	120 mm x Ø85 mm





Extra 80700C

RGB & CCT controller

26-62-00

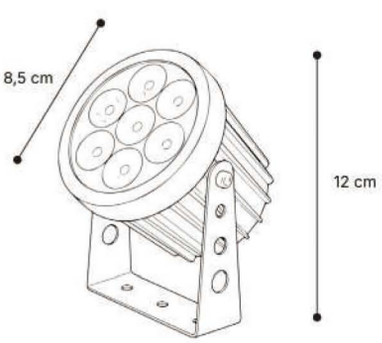


LIGHTING

OUTDOOR

ALLATOONA

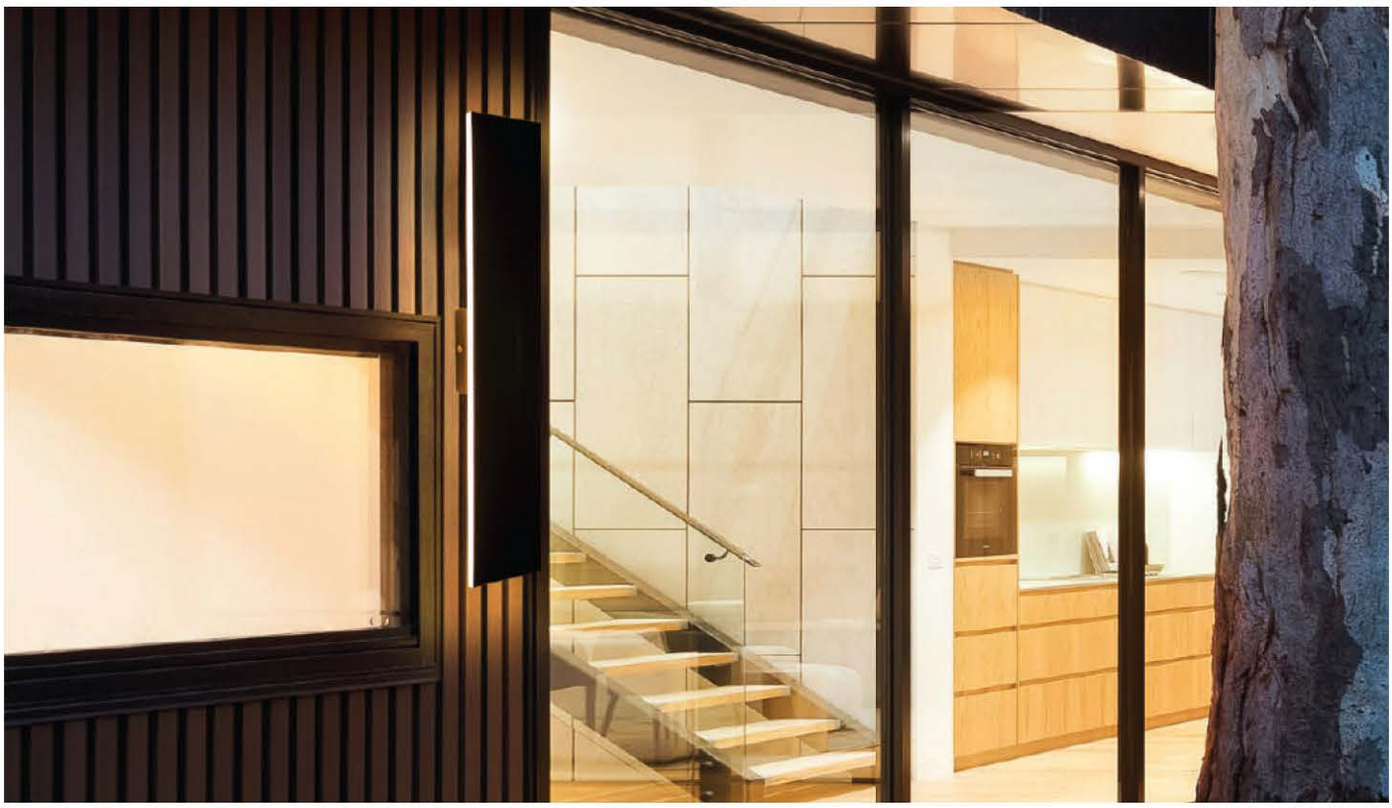

Λεπτομέρειες | Details

Black **80205711**

Material	Aluminum
Power	LED 10W
Dimming	No
Colour temperature	3000K
Lumen	214
Classification	IP54
Dimensions	45 x 80 x 600 mm

26-55-00

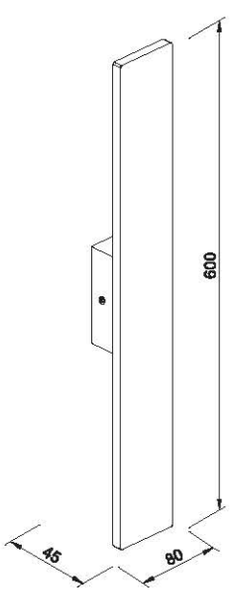



FOLSOM

Λεπτομέρειες | Details

Black **80205811**

Material	Aluminum
Power	LED 10W
Dimming	No
Colour temperature	3000K
Lumen	260
Classification	IP54
Dimensions	45 x 80 x 600 mm

26-55-00

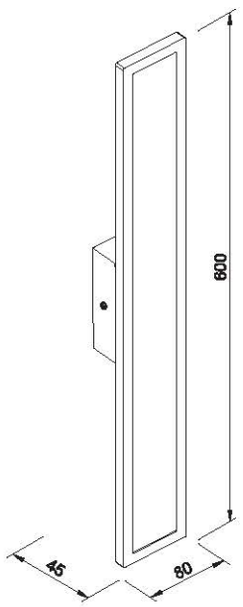



BARTON

Λεπτομέρειες | Details

Black **80205911**

Material	Aluminum
Power	LED 15W
Dimming	No
Colour temperature	3000K
Lumen	345
Classification	IP54
Dimensions	45 x 80 x 600 mm

26-55-00

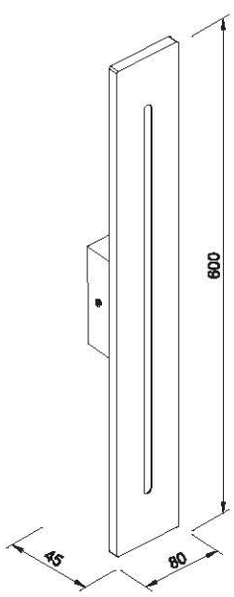



Calenia



Λεπτομέρειες | Details

● Black	80301050
Material	ABS & PC
Power	LED 9W
Voltage	220-240V
Dimming	No
Colour temperature	2800K | 4000K | 6000K
Lumen	1000
Classification	IP65
Dimensions	1320 x 1320 x 780 mm

26-26-30

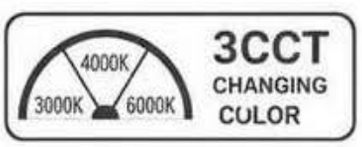

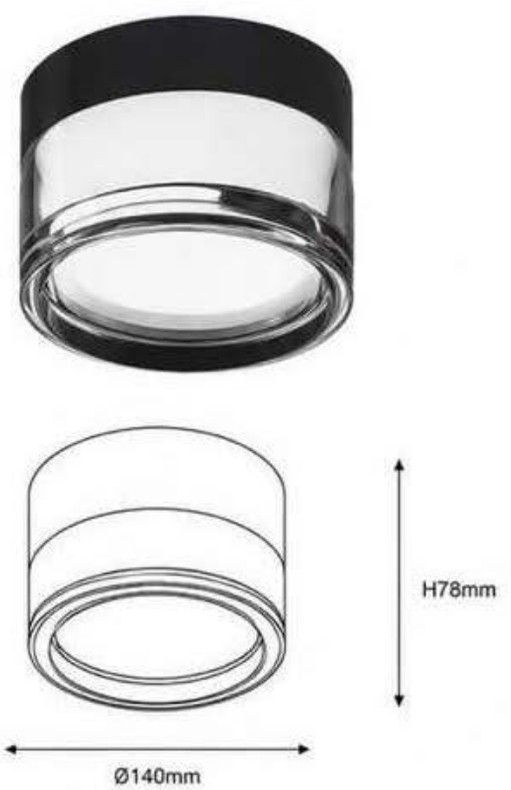

ONEIDA

Λεπτομέρειες | Details

Black **80207540**



Material	ABS & Plastic
Power	LED 12W
Dimming	No
Colour temperature	3000K | 4000K | 6000K
Lumen	600
Classification	IP65
Dimensions	102 mm Ø170 mm

26-26-50



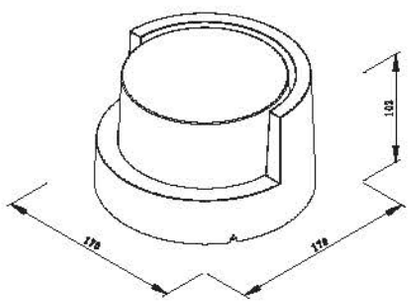



LOUISE

Λεπτομέρειες | Details



Anthracite **80203340**

Material	ABS & PS
Power	LED 4W (x2)
Dimming	No
Colour temperature	3000K | 4000K | 6000K
Lumen	500
Classification	IP44
Dimensions	95 x 120 x 140 mm

26-19-70



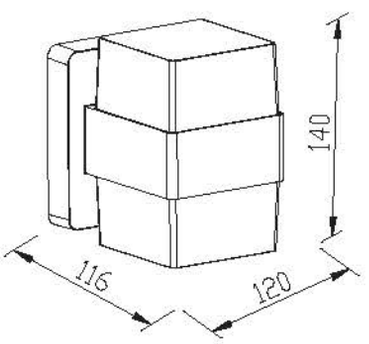



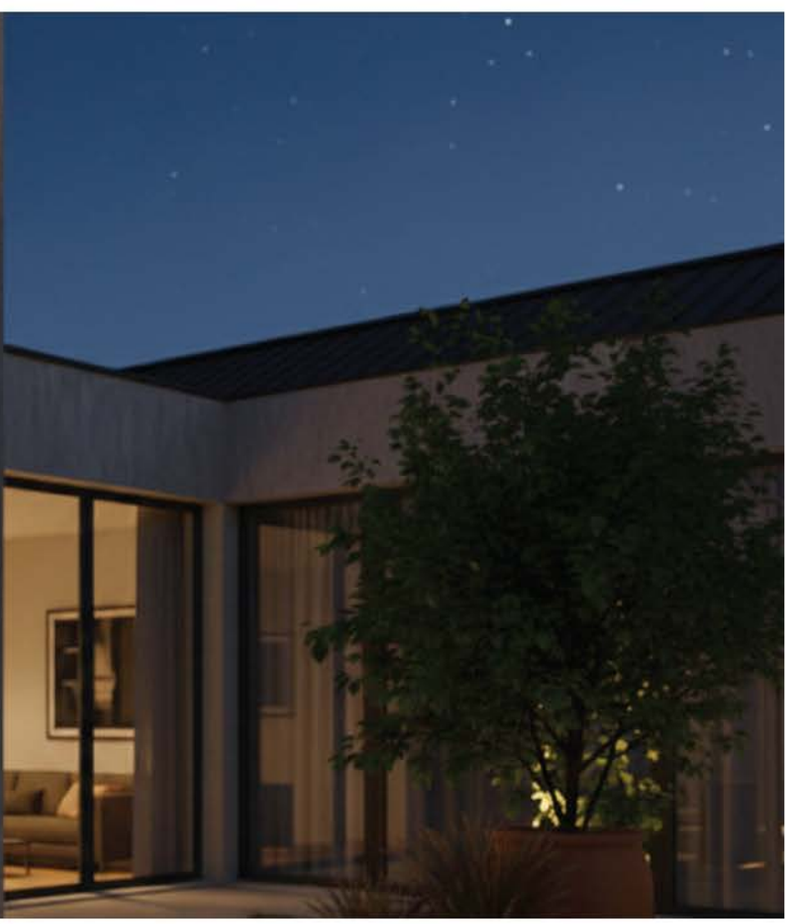

ATHABASCA

Λεπτομέρειες | Details

Anthracite **80203240**



Material	ABS & PS
Power	LED 4W (x2)
Dimming	No
Colour temperature	3000K | 4000K | 6000K
Lumen	500
Classification	IP44
Dimensions	120 x 140 mm Ø95 mm

26-19-70



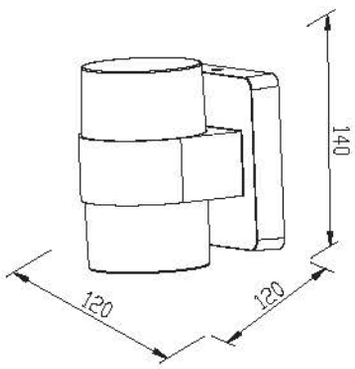



ZAR

Λεπτομέρειες | Details

Black **80205614**



Material	Aluminum & PC
Voltage	220-240 V
Dimming	No
Classification	IP65
Dimensions	100 x 145 x 245 mm
Bulb	E27

26-50-00

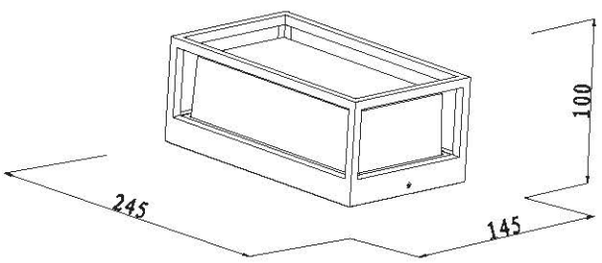



ISABELLA

Λεπτομέρειες | Details

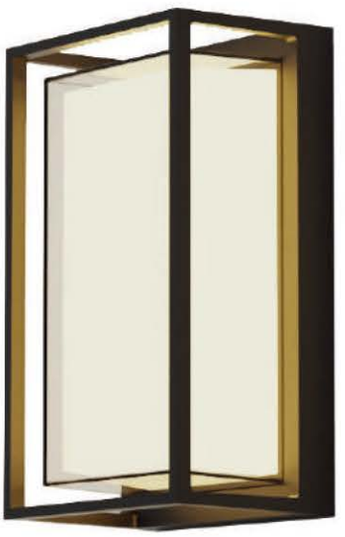

Black **80205511**

Material	Aluminum & PC
Power	LED 12W
Dimming	No
Colour temperature	3000K
Lumen	800
Classification	IP65
Dimensions	100 x 145 x 245 mm

26-65-00

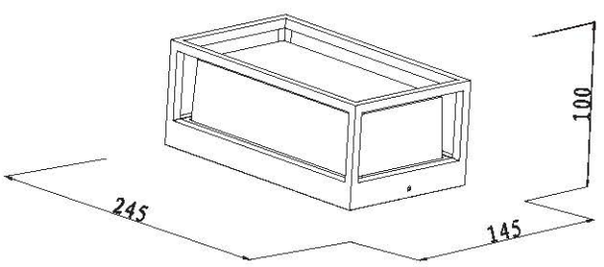



CADDO



Λεπτομέρειες | Details



Anthracite **80400414**

Material	ABS
Voltage	220-240 V
Classification	IP54
Dimensions	200 x 200 x 255 mm
Bulb	E27

26-37-00

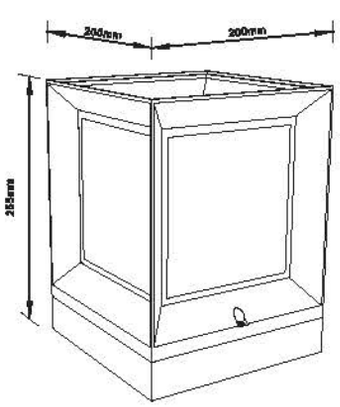

ANNIE

Λεπτομέρειες | Details



Black **80206114**

Material	Plastic
Voltage	220-240 V
Classification	IP65
Dimensions	150 x 160 x 270 mm
Bulb	E27

26-36-50

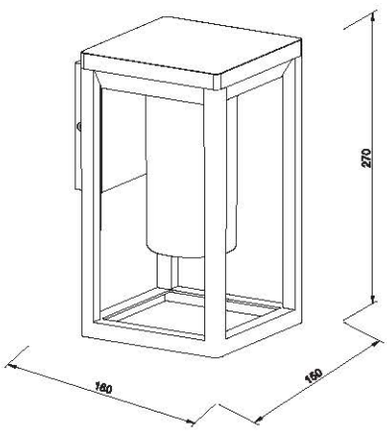



CAROR







Λεπτομέρειες | Details

White	**80204020**
Grey	**80204030**
Anthracite	**80204040**



Material	ABS & PC
Light output	Up & Down
Power	LED 10,5W
Dimming	No
Colour temperature	3000K | 4000K | 6000K
Lumen	630
Classification	IP65
Dimensions	171 x 46 x 82 mm

26-35-50



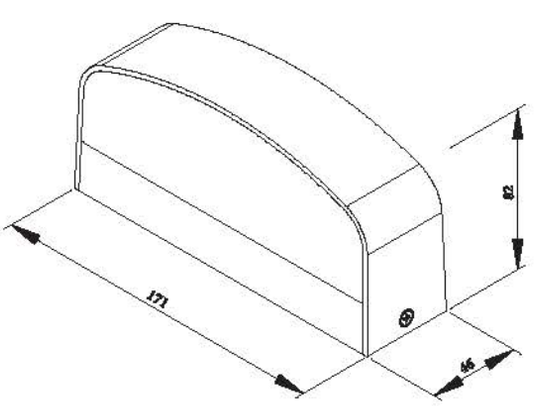

WINONA

Λεπτομέρειες | Details

Black **80205414**



Material	Aluminum
Light output	Up & Down
Voltage	220-240 V
Dimming	No
Classification	IP65
Dimensions	90 x 120 x 220 mm
Bulb	E27

26-33-00

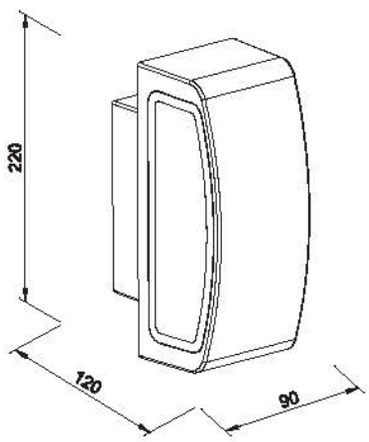



NISKEY

Λεπτομέρειες | Details

White	**80204120**
Grey	**80204130**
Anthracite	**80204140**



Material	ABS & Tempered Glass
Light output	Up & Down
Power	LED 10W
Dimming	No
Colour temperature	3000K | 4000K | 6000K
Lumen	460
Classification	IP54
Dimensions	175 x 90 x 128 mm

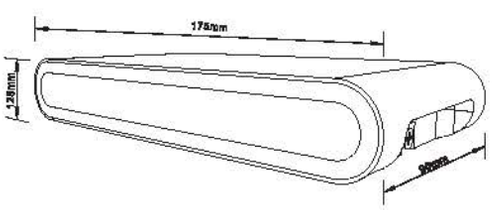

26-22-00



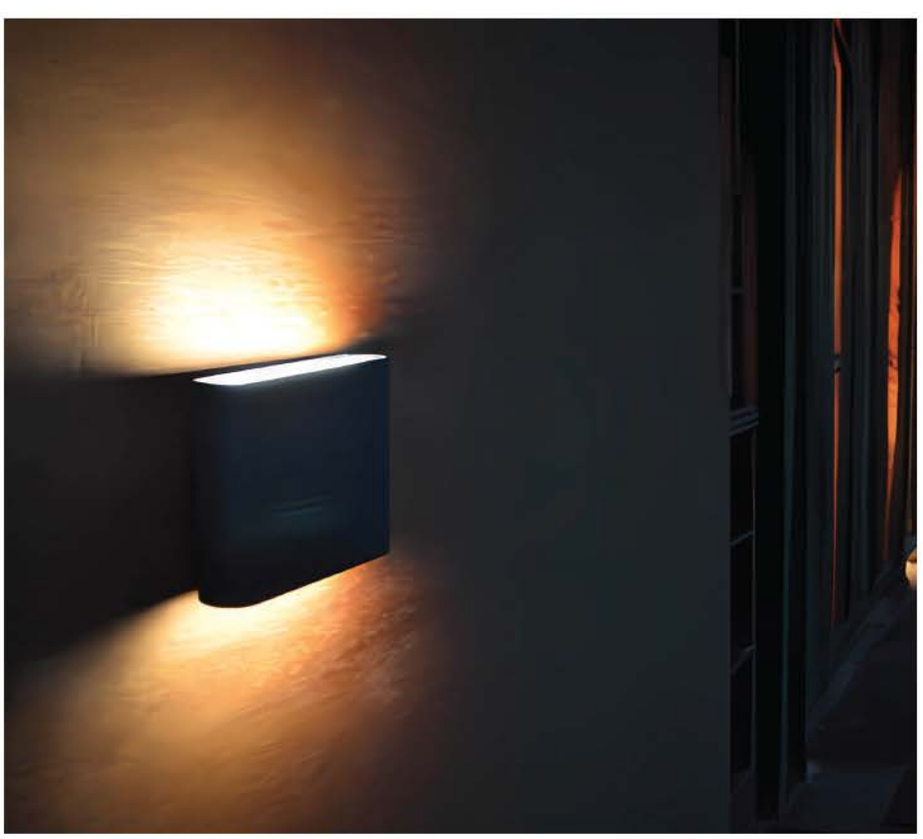





FLATHEAD









Λεπτομέρειες | Details

White	**80203520**
Grey	**80203530**
Anthracite	**80203540**



Material	ABS & Tempered Glass
Light output	Up & Down
Power	LED 6W
Dimming	No
Colour temperature	3000K | 4000K | 6000K
Lumen	250
Classification	IP65
Dimensions	117 x 100 x 137 mm

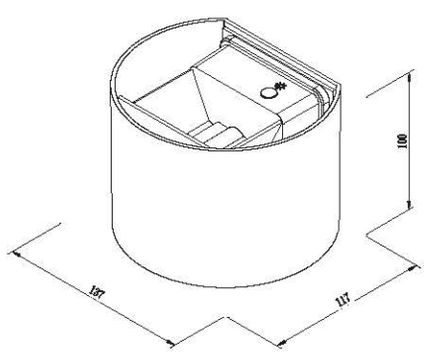

26-20-00

ADJUSTABLE

3CCT CHANGING COLOR
4000K
3000K
6000K

Λεπτομέρειες | Details

White	**80202220**
Grey	**80202230**
Anthracite	**80202240**



Material	ABS
Power	LED 3W
Colour temperature	3000K | 4000K | 6000K
Lumen	270
Classification	IP65
Dimensions	70 x 160 x 33 mm

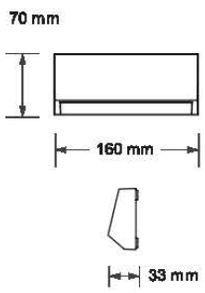

26-14-20

3CCT CHANGING COLOR



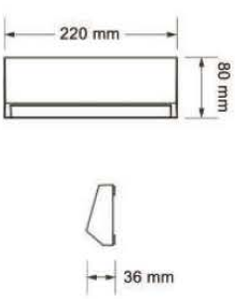

Λεπτομέρειες | Details

White	**80202320**
Grey	**80202330**
Anthracite	**80202340**

Material	ABS
Power	LED 3,5W
Dimming	No
Colour temperature	3000K | 4000K | 6000K
Lumen	320
Classification	IP65
Dimensions	80 x 220 x 36 mm

26-16-30

3CCT CHANGING COLOR

BLUE

Λεπτομέρειες | Details

White	**80202120**
Grey	**80202130**
Anthracite	**80202140**



Material	ABS
Power	LED 2W
Colour temperature	3000K | 4000K | 6000K
Lumen	120
Classification	IP65
Dimensions	70 x 100 x 33 mm

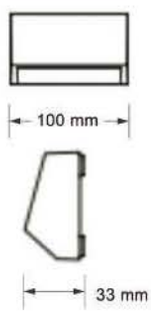

26-11-40







KENTUCKY

Λεπτομέρειες | Details

White	**80202020**
Grey	**80202030**
Anthracite	**80202040**

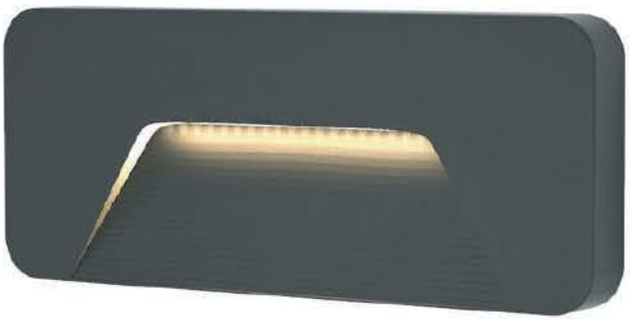

Material	ABS & PC
Power	LED 3W
Dimming	No
Colour temperature	3000K | 4000K | 6000K
Lumen	180
Classification	IP65
Dimensions	80 x 221 x 35 mm

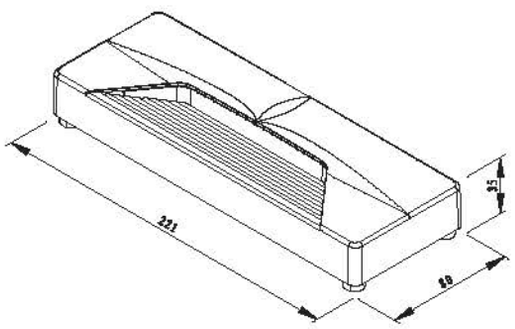

26-14-00







SILVER

Λεπτομέρειες | Details

White	80202420
Grey	80202430
Anthracite	80202440

Material	ABS & PC
Power	LED 1,2W
Dimming	No
Colour temperature	3000K
Lumen	70
Classification	IP54
Dimensions	50 x 70 x 12 mm

26-06-70



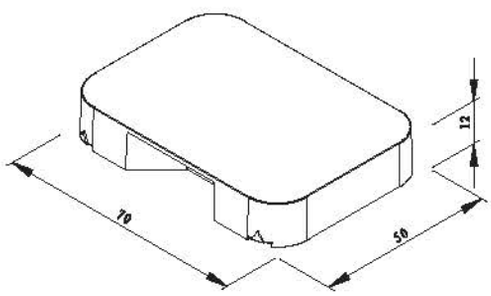





MAROON

Λεπτομέρειες | Details

White	**80201620**
Grey	**80201630**
Anthracite	**80201640**



Material	ABS & PC
Power	LED 3W
Dimming	No
Colour temperature	3000K | 4000K | 6000K
Lumen	90
Classification	IP65
Dimensions	26 mm Ø148 mm

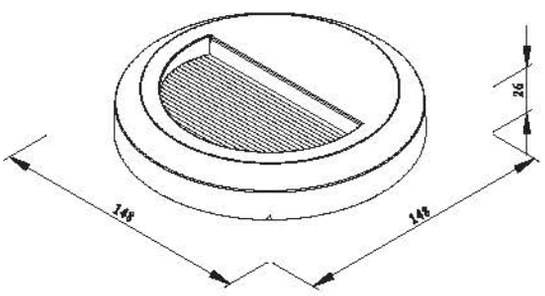

26-13-60

3CCT CHANGING COLOR

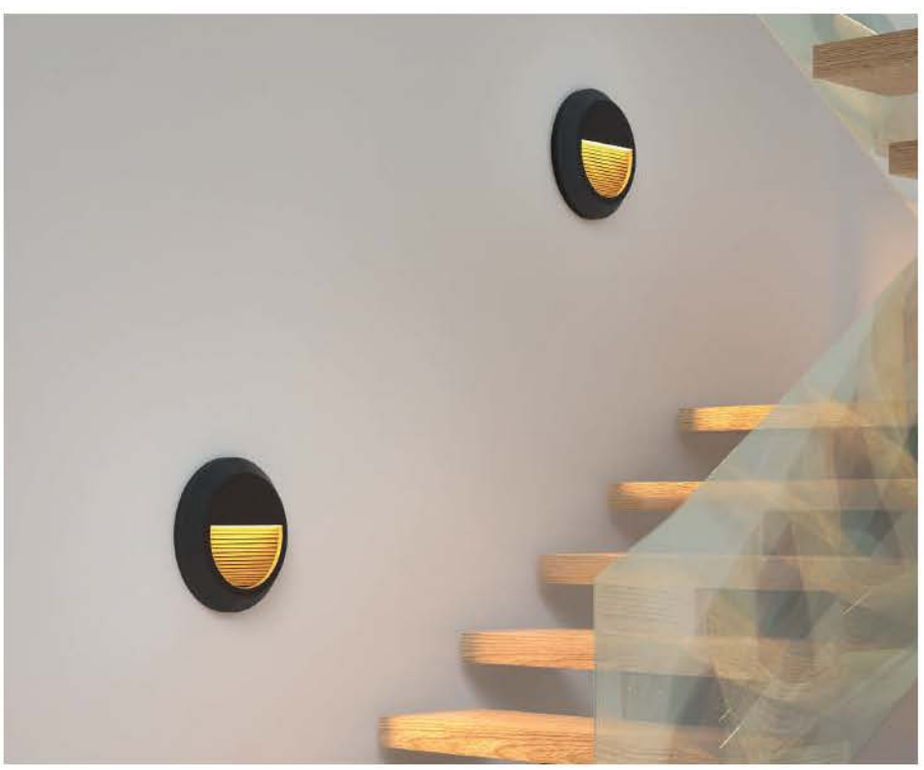





HORSESHOE

Λεπτομέρειες | Details

White	**80201920**
Grey	**80201930**
Anthracite	**80201940**

Material	ABS & PC
Power	LED 2W
Dimming	No
Colour temperature	3000K | 4000K | 6000K
Lumen	70
Classification	IP65
Dimensions	32 mm Ø128 mm

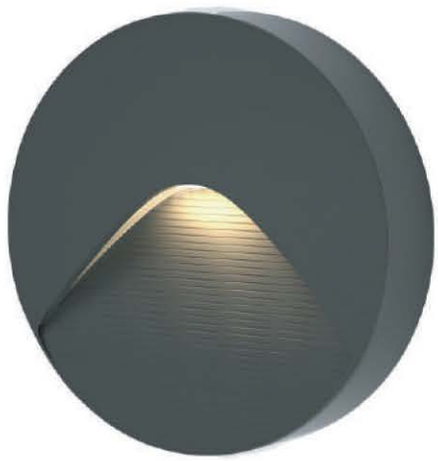

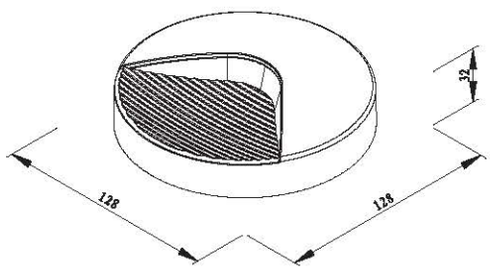

26-12-50

3CCT CHANGING COLOR





SALMON

Λεπτομέρειες | Details

White	**80201820**
Grey	**80201830**
Anthracite	**80201840**



Material	ABS & PC
Power	LED 3W
Dimming	No
Colour temperature	3000K | 4000K | 6000K
Lumen	90
Classification	IP65
Dimensions	124 x 124 x 27 mm

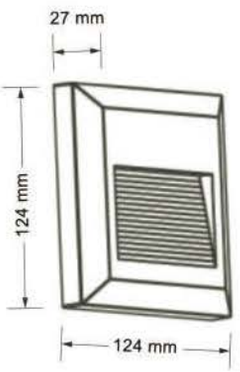

26-13-20







MONO







Λεπτομέρειες | Details

White	**80201720**
Grey	**80201730**
Anthracite	**80201740**



Material	ABS & PC
Power	LED 3W
Dimming	No
Colour temperature	3000K | 4000K | 6000K
Lumen	90
Classification	IP65
Dimensions	80 x 220 x 28 mm

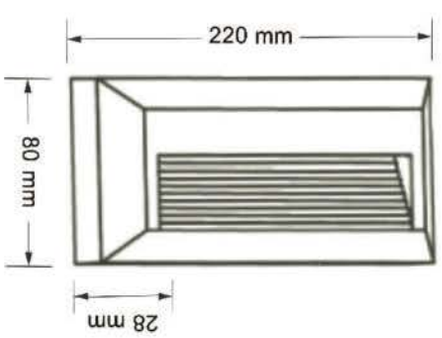

26-15-20

3CCT CHANGING COLOR

GEORGE

Λεπτομέρειες | Details

White	**80201520**
Grey	**80201530**
Anthracite	**80201540**

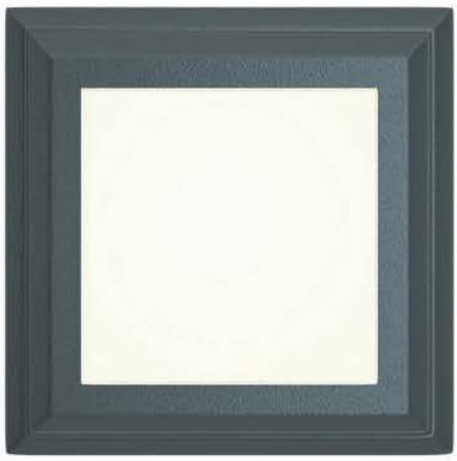

Material	ABS & PC
Power	LED 3W
Dimming	No
Colour temperature	3000K | 4000K | 6000K
Lumen	180
Classification	IP65
Dimensions	123 x 123 x 28 mm

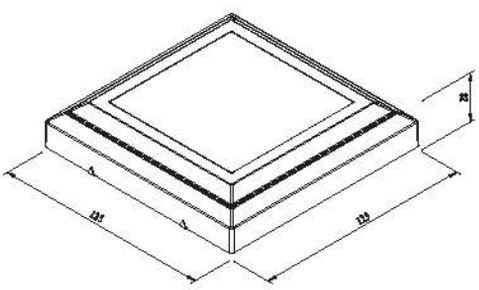

26-15-60







WILLOUGHBY

Λεπτομέρειες | Details

White	**80201320**
Grey	**80201330**
Anthracite	**80201340**



Material	ABS & PC
Power	LED 4W
Dimming	No
Colour temperature	3000K | 4000K | 6000K
Lumen	240
Classification	IP65
Dimensions	80 x 220 x 28 mm

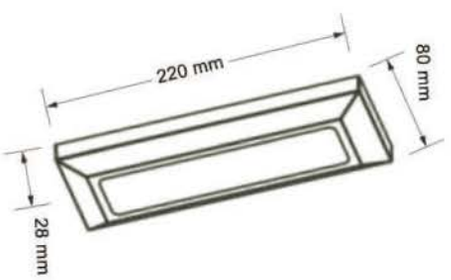

26-17-60







POWELL

Λεπτομέρειες | Details

White	**80200224**
Grey	**80200234**
Anthracite	**80200244**



Material	ABS & PC
Light output	Up / Down
Voltage	220-240 V
Classification	IP54
Dimensions	70 x 80 x 90 mm
Bulb	GU10

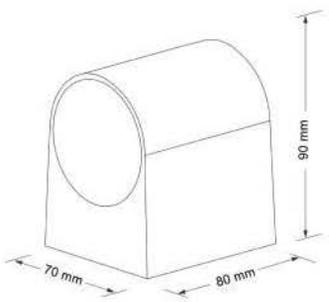

26-08-90





MICHIGAN







Λεπτομέρειες | Details

White	**80200124**
Grey	**80200134**
Anthracite	**80200144**

Material	ABS & PC
Light output	Up & Down
Voltage	220-240 V
Classification	IP54
Dimensions	70 x 90 x 147 mm
Bulb	GU10



26-10-50

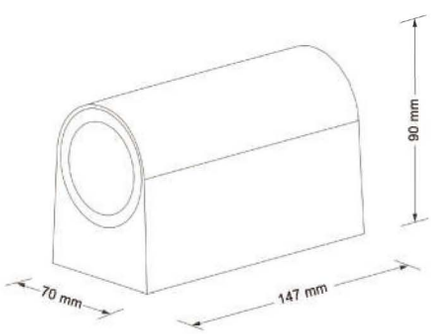

CANDLER







Λεπτομέρειες | Details



White	**80203724**
Grey	**80203734**
Anthracite	**80203744**

Material	ABS
Light output	Up & Down
Voltage	220-240V
Classification	IP54
Dimensions	155 x 170 mm Ø90 mm
Bulb	E27

26-15-00

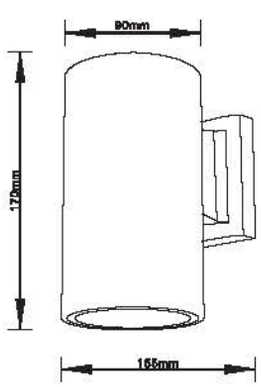

WINNIPEG

Λεπτομέρειες | Details

White	**80203424**
Grey	**80203434**
Anthracite	**80203444**

Material	ABS & PC
Light output	Up & Down
Voltage	220-240V
Classification	IP54
Dimensions	153 x 260 mm Ø90 mm
Bulb	E27 (x2)

26-18-90

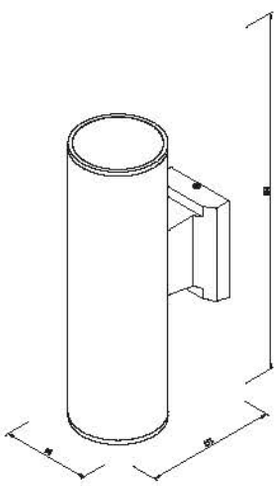





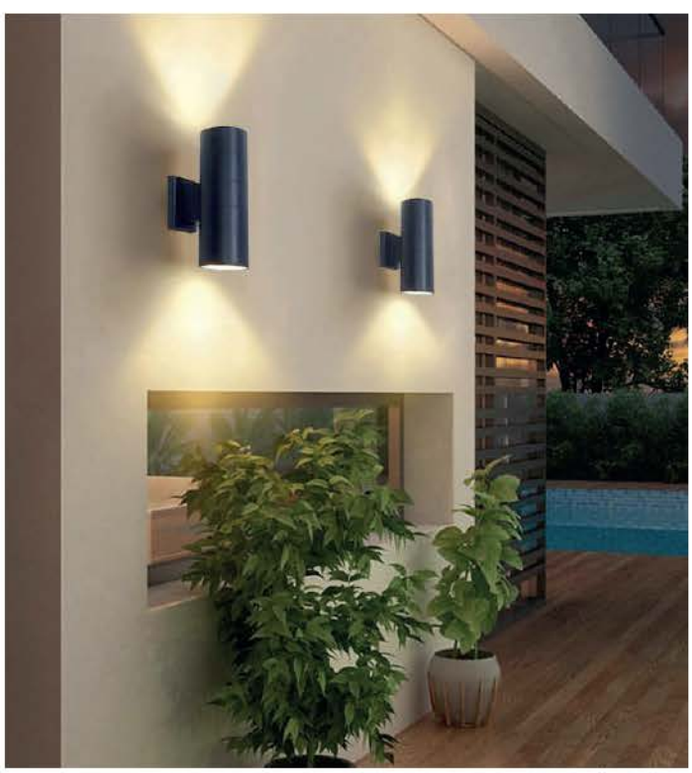

REINDEER

Λεπτομέρειες | Details

White	**80300524**
Grey	**80300534**
Anthracite	**80300544**

Material	ABS & PC
Light output	Down
Voltage	220-240V
Classification	IP44
Dimensions	141 mm Ø94 mm
Bulb	GU10

26-13-50



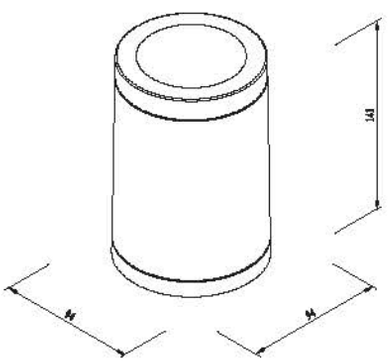





CHELAN

Λεπτομέρειες | Details

White	**80300124**
Grey	**80300134**
Anthracite	**80300144**

Material	ABS
Light output	Down
Voltage	220-240 V
Classification	IP65
Dimensions	130 mm Ø60 mm
Bulb	GU10

26-12-00

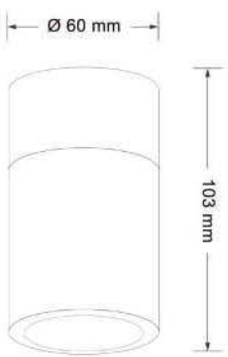







EKLUTNA

Λεπτομέρειες | Details

White	**80200524**
Grey	**80200534**
Anthracite	**80200544**



Material	ABS & Glass
Light output	Up / Down
Voltage	220-240 V
Classification	IP54
Dimensions	73 x 113 x 113 mm
Bulb	GU10

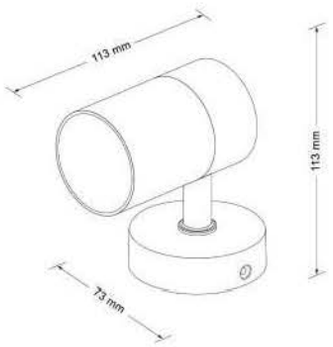

26-08-30





OUACHITA

Λεπτομέρειες | Details

White	**80200624**
Grey	**80200634**
Anthracite	**80200644**

Material	ABS & Glass
Light output	Up & Down
Voltage	220-240 V
Classification	IP54
Dimensions	73 x 113 x 152 mm
Bulb	GU10 (x2)

26-10-10

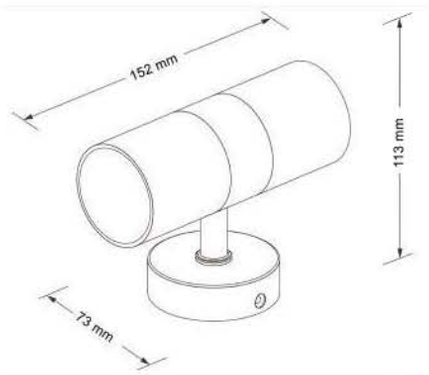







NORMAN

Λεπτομέρειες | Details

White	**80200424**
Grey	**80200434**
Anthracite	**80200444**

Material	ABS & PC
Light output	Up / Down
Voltage	220-240 V
Classification	IP54
Dimensions	70 x 80 x 90 mm
Bulb	GU10

26-08-90



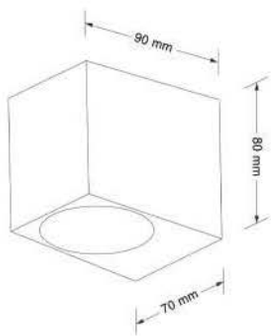





HAVASU







Λεπτομέρειες | Details

White	**80200324**
Grey	**80200334**
Anthracite	**80200344**

Material	ABS & PC
Light output	Up & Down
Voltage	220-240 V
Classification	IP54
Dimensions	70 x 90 x 147 mm
Bulb	GU10 (x2)

26-10-50



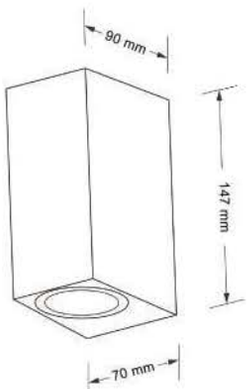

PALMYRA







Λεπτομέρειες | Details

	White	**80203924**
	Grey	**80203934**
	Anthracite	**80203944**

Material	ABS
Light output	Up & Down
Voltage	220-240 V
Classification	IP54
Dimensions	90 x 155 x 265 mm
Bulb	E27

26-19-50



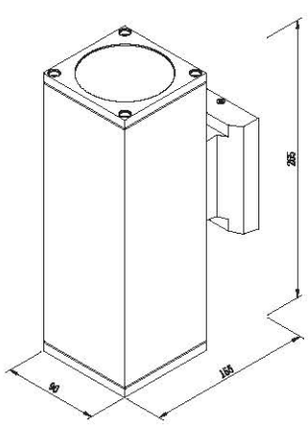

ELARBEE

Λεπτομέρειες | Details

White	**80203824**
Grey	**80203834**
Anthracite	**80203844**



Material	ABS
Light output	Up / Down
Voltage	220-240V
Classification	IP54
Dimensions	90 x 155 x 175 mm
Bulb	E27 (x2)

26-15-00

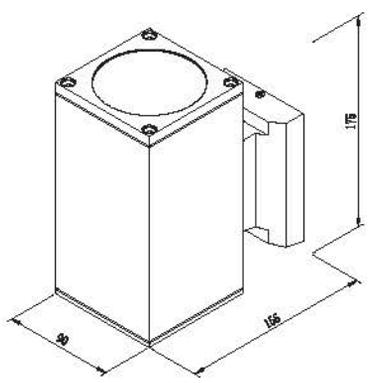





MONUMENT

Λεπτομέρειες | Details

White	**80301024**
Grey	**80301034**
Anthracite	**80301044**

Material	ABS & Plastic
Voltage	220-240 V
Classification	IP44
Dimensions	80 x 80 x 81,5 mm
Bulb	GU10

26-12-90



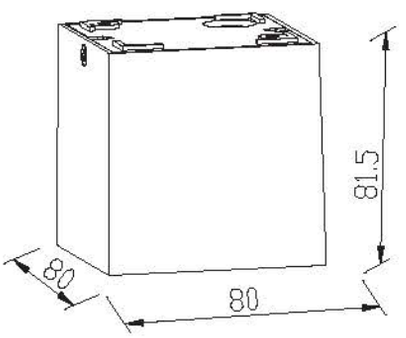





COWART

Λεπτομέρειες | Details

	White	**80300624**
	Grey	**80300634**
	Anthracite	**80300644**

Material	ABS & Tempered Glass
Light output	Down
Voltage	220-240V
Classification	IP44
Dimensions	70 x 70 x 120 mm
Bulb	GU10

26-15-50

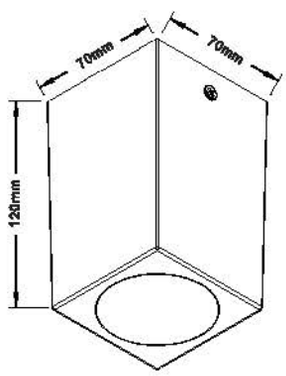







YELLOWSTONE

Λεπτομέρειες | Details

White	**80200921**
Grey	**80200931**
Anthracite	**80200941**



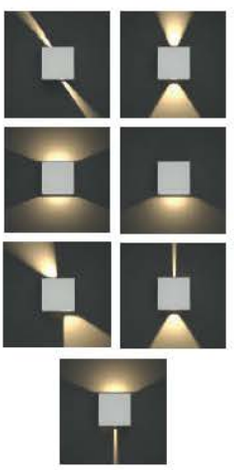



Material	ABS & PC
Light output	Up & Down
Power	LED 3W
Dimming	No
Colour temperature	3000K
Lumen	95
Classification	IP65
Dimensions	120 x 120 x 54 mm

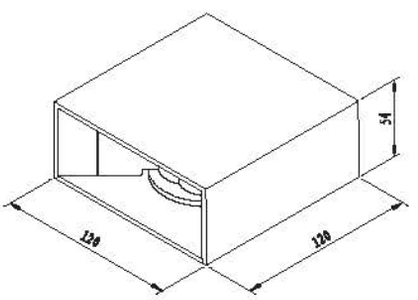

26-18-90

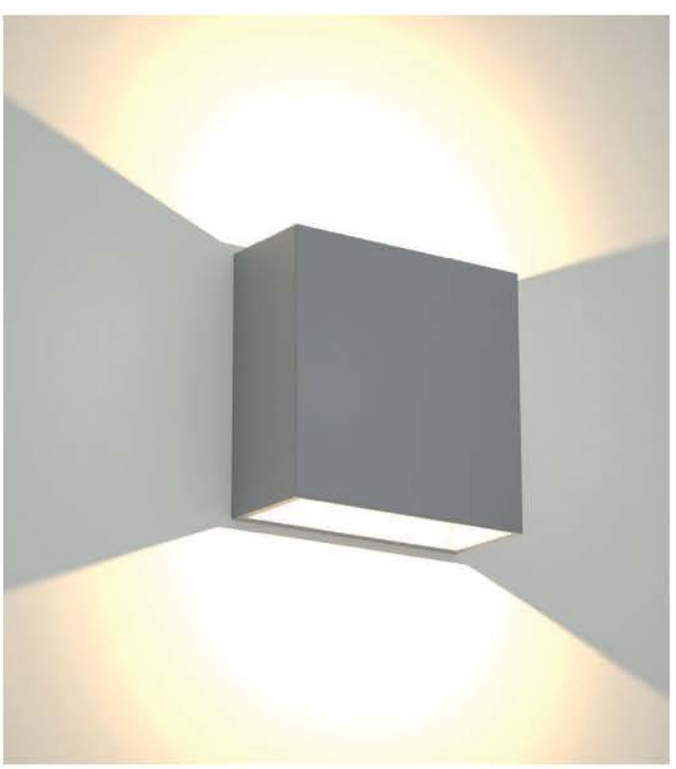



LANIER

Λεπτομέρειες | Details

White	80201021
Grey	80201031
Anthracite	80201041



Material	ABS & PC
LIght output	Up & Down
Power	LED 4W
Dimming	No
Colour temperature	3000K
Lumen	130
Classification	IP65
Dimensions	42 x 120 x 32 mm



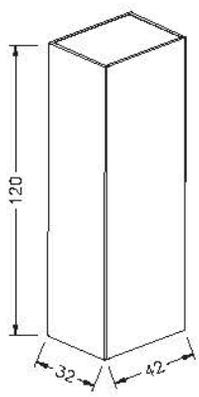

26-10-60





GIO

Λεπτομέρειες | Details

White	**80206320**
Grey	**80206330**
Anthracite	**80206340**



Material	ABS & PC
Light output	Up & Down
Power	LED 16W
Dimming	No
Colour temperature	3000K | 4000K | 6000K
Lumen	900
Classification	IP65
Dimensions	46 x 83 x 331 mm

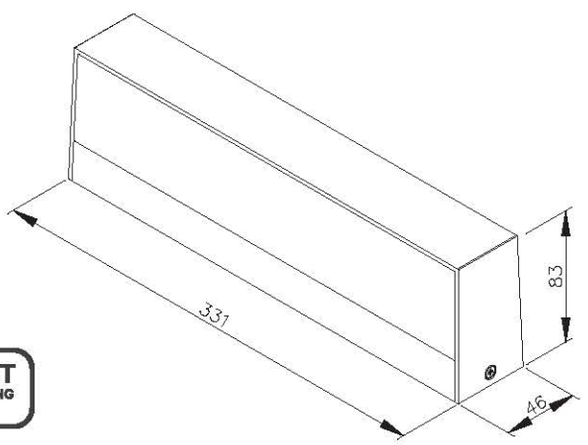

26-40-00







Λεπτομέρειες | Details

White	**80200820**
Grey	**80200830**
Anthracite	**80200840**



Material	ABS & PC
LIght output	Up & Down
Power	LED 9W
Dimming	No
Colour temperature	3000K | 4000K | 6000K
Lumen	600
Classification	IP65
Dimensions	46 x 171 x 83 mm

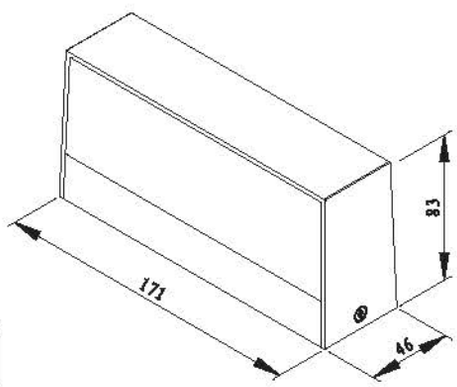

26-32-50



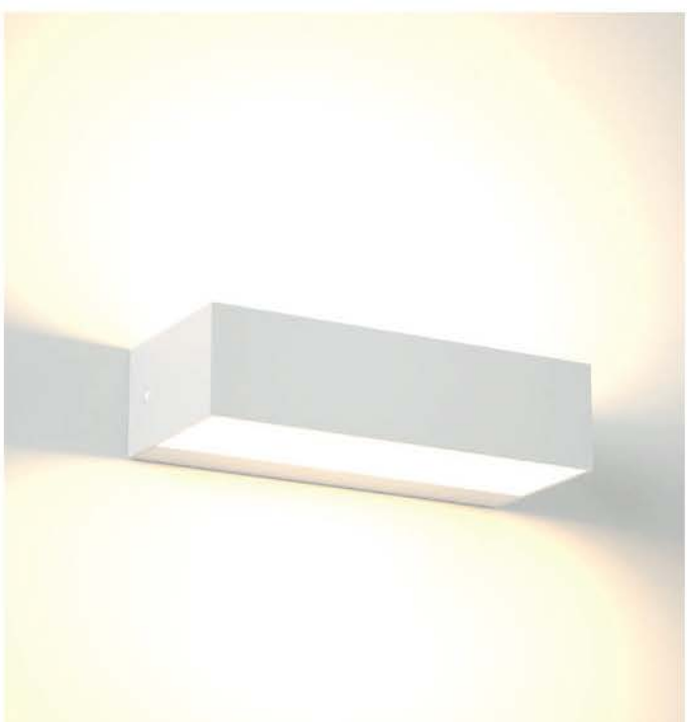



MARTIN







Λεπτομέρειες | Details

White	**80200720**
Grey	**80200730**
Anthracite	**80200740**



Material	ABS & PC
Light output	Up & Down
Power	LED 12W
Dimming	No
Colour temperature	3000K | 4000K | 6000K
Lumen	580
Classification	IP65
Dimensions	90 x 230 x 102 mm

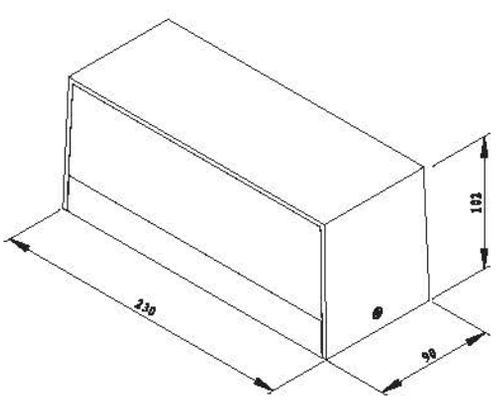

26-35-80

3CCT CHANGING COLOR

EMERALD

Λεπτομέρειες | Details

White	**80203121**
Grey	**80203131**
Anthracite	**80203141**

Material	ABS & PC
Light output	Up & Down
Power	LED 6W
Dimming	No
Colour temperature	3000K
Lumen	250
Classification	IP65
Dimensions	99 x 99 x 99 mm

ADJUSTABLE

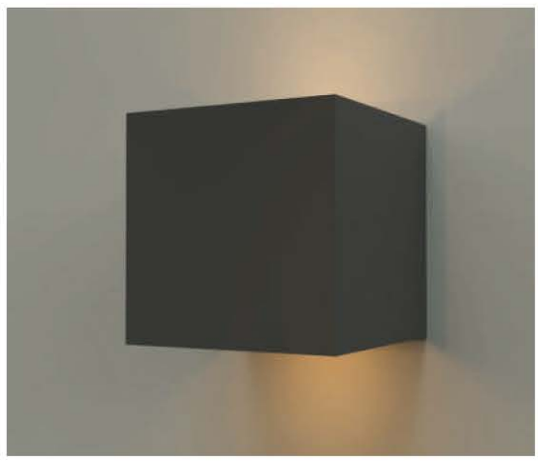

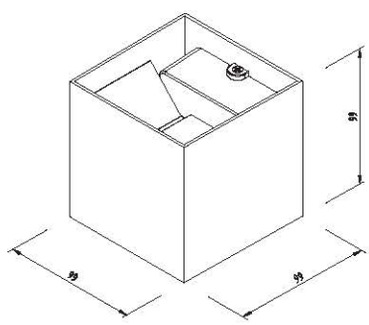

26-20-00

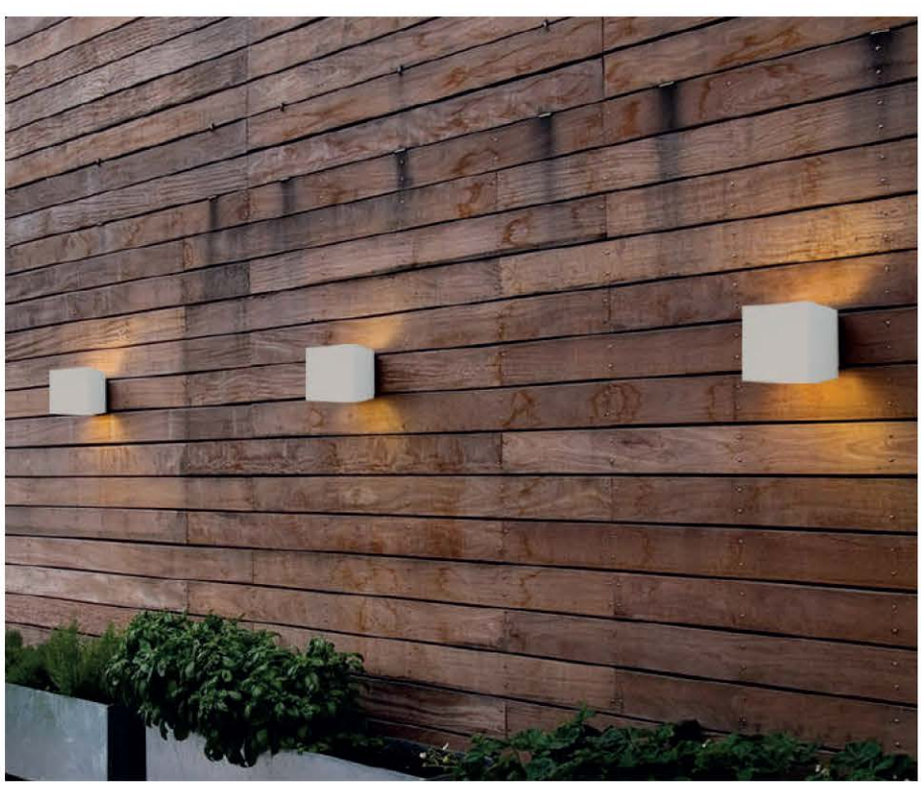

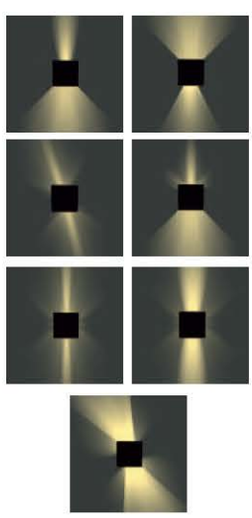

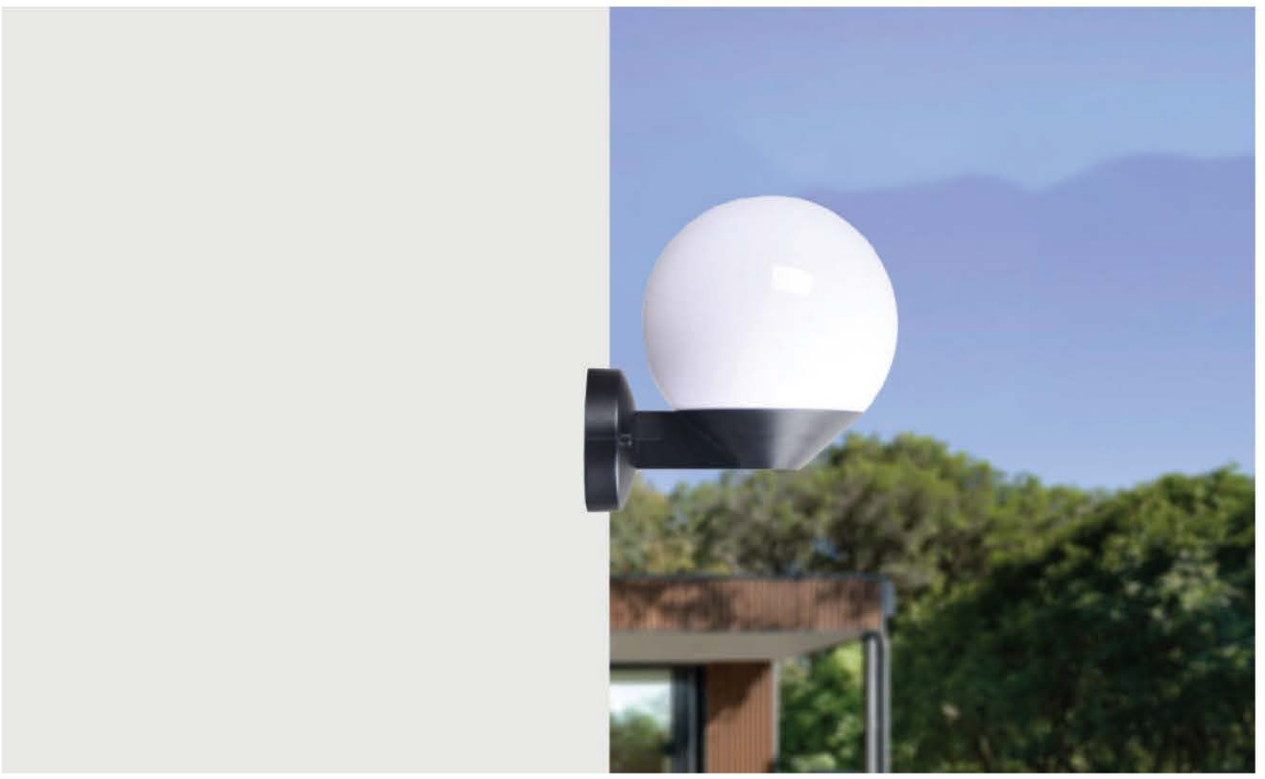

Λεπτομέρειες | Details

Black **80205314**

Material	PMMA
Voltage	220-240 V
Classification	IP44
Dimensions	200 x 240 x 245 mm
Bulb	E27



26-11-00

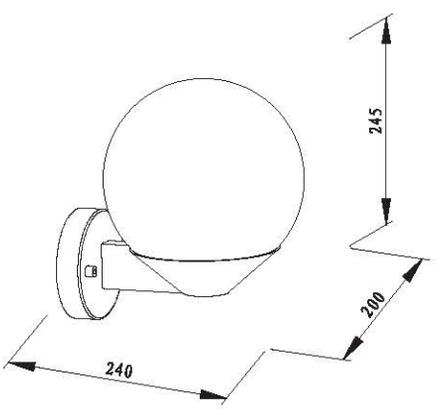



EVELYN

Λεπτομέρειες | Details

Black **80300914**



Material	PMMA
Voltage	220-240 V
Classification	IP44
Dimensions	200 x 200 x 235 mm
Bulb	E27

26-09-00

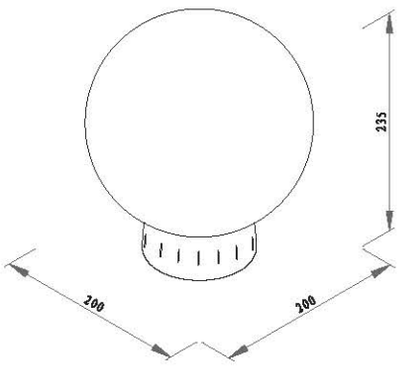



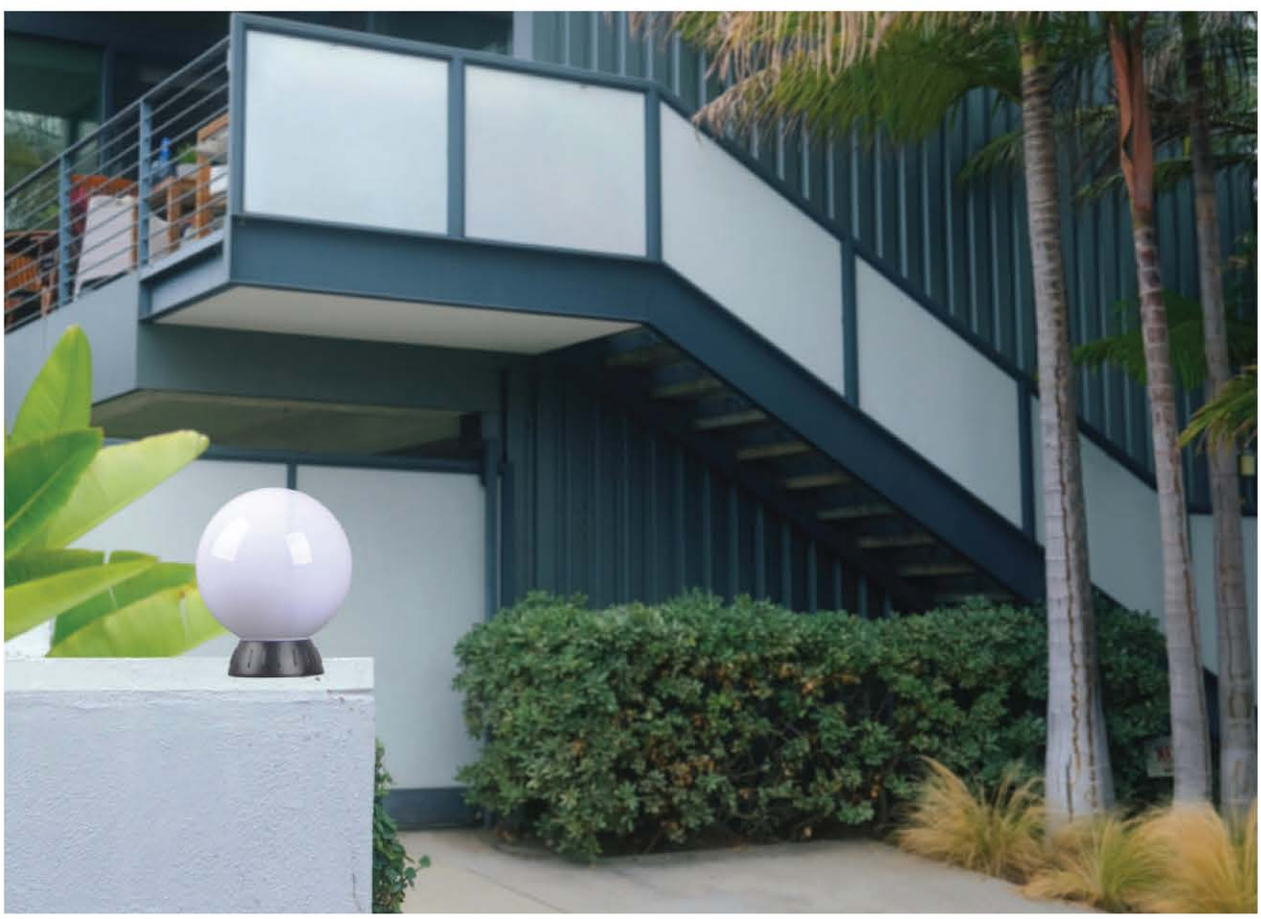

GENEVA MEGA

Λεπτομέρειες | Details

White	**80207620**
Grey	**80207630**
Black	**80207640**

Material	ABS & PC
Power	LED 18W
Dimming	No
Colour temperature	3000K | 4000K | 6000K
Lumen	600
Classification	IP65
Dimensions	80 mm Ø220 mm





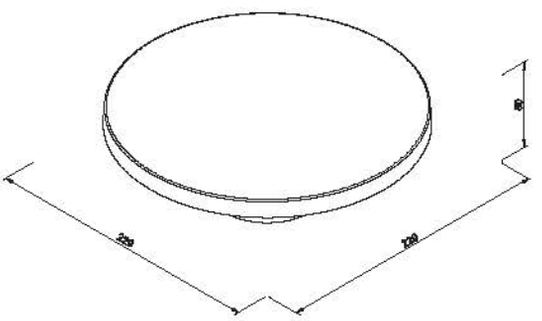

26-31-20

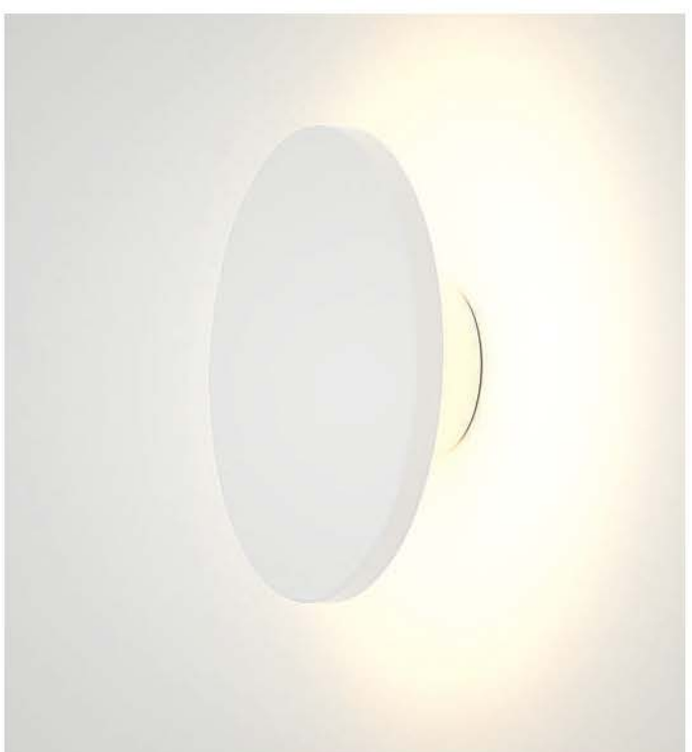

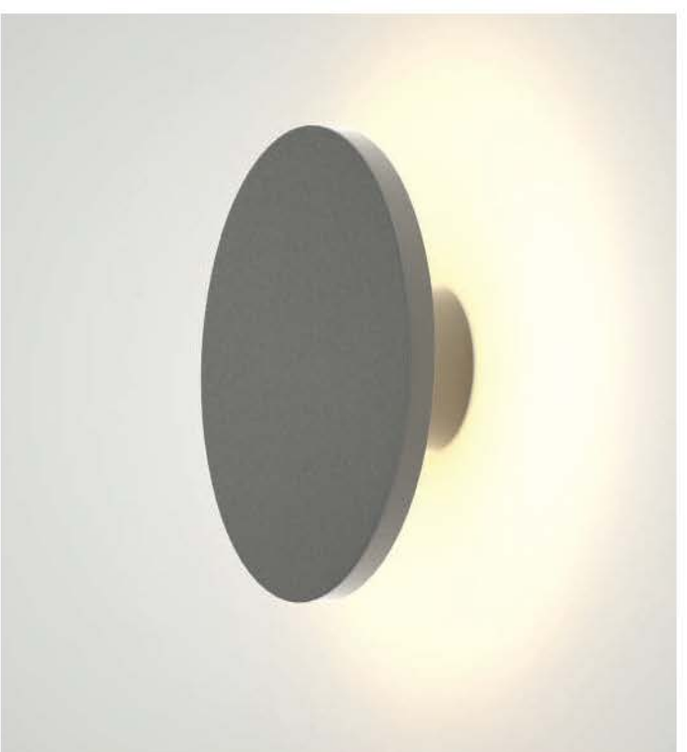

GENEVA

Λεπτομέρειες | Details

White	**80201120**
Grey	**80201130**
Black	**80201140**

Material	ABS & PC
Power	LED 12W
Dimming	No
Colour temperature	3000K | 4000K | 6000K
Lumen	1000
Classification	IP65
Dimensions	55 mm Ø170 mm

26-26-50



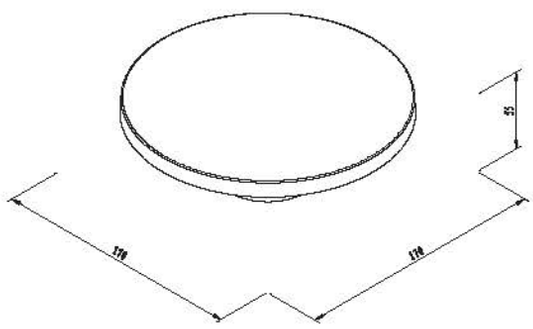



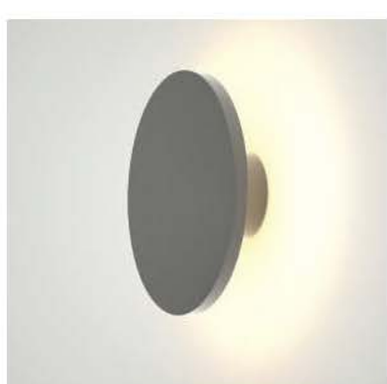

RABUN







Λεπτομέρειες | Details

Black	**80202514**
White	**80202524**



Material	ABS
Voltage	220-240 V
Classification	IP44
Dimensions	190 x 237 x 242 mm
Bulb	E27

26-21-50

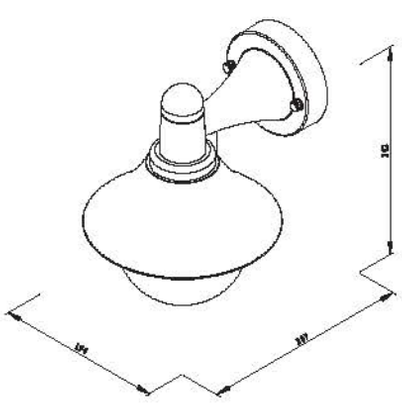

REDWOOD

Λεπτομέρειες | Details

Black **80207410**



Material	ABS & PC
Power	LED 13W
Dimming	No
Colour temperature	3000K | 4000K | 6000K
Lumen	600
Classification	IP65
Dimensions	175 x 145 x 175 mm

26-43-10



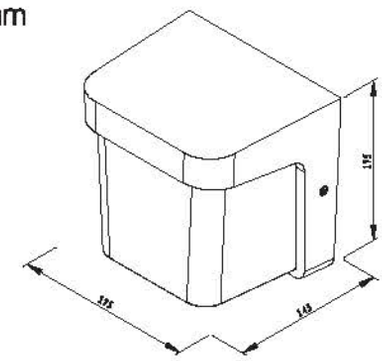



WILDWOOD







Λεπτομέρειες | Details



White	**80203624**
Grey	**80203634**
Anthracite	**80203644**

Material	ABS & PC
Voltage	220-240 V
Classification	IP65
Dimensions	130 x 130 x 320 mm
Bulb	E27

26-27-50

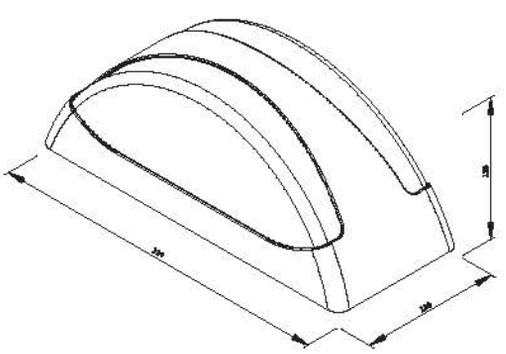

CLEAR

Λεπτομέρειες | Details

	White	**80202724**
	Grey	**80202734**
	Anthracite	**80202744**

Material	ABS & PC
Voltage	220-240 V
Classification	IP65
Dimensions	130 x 320 x 132 mm
Bulb	E27



26-20-50

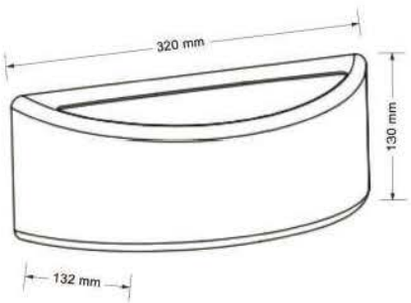

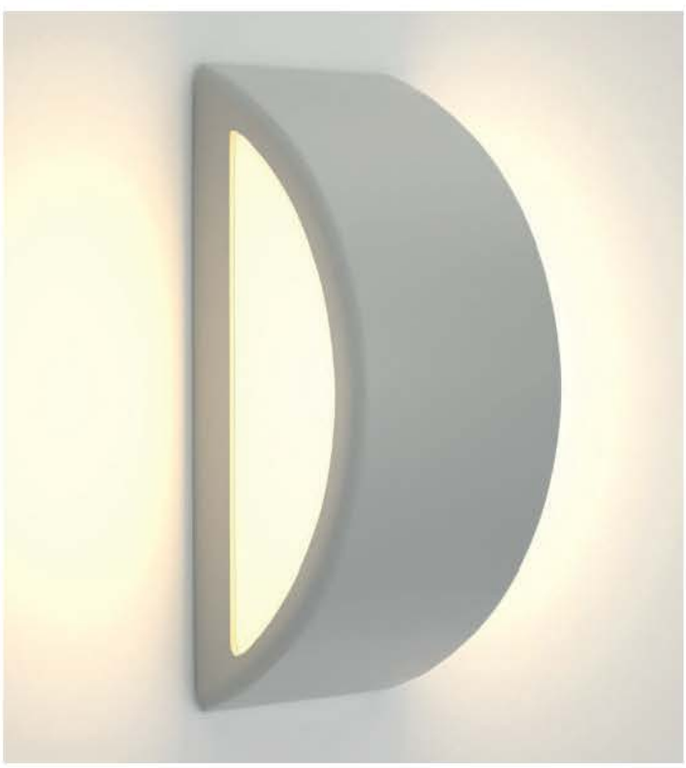



ECHO

Λεπτομέρειες | Details

White	**80202920**
Grey	**80202930**
Anthracite	**80202940**





Material	ABS & PC
Power	LED 15W
Dimming	No
Colour temperature	3000K | 4000K | 6000K
Lumen	1000
Classification	IP65
Dimensions	105 x 230 x 55 mm

26-14-50

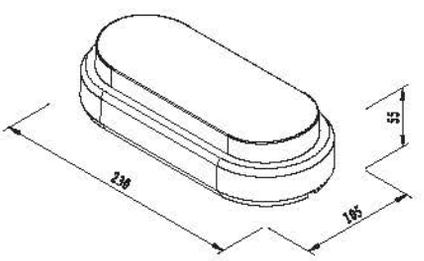





ERIE

Λεπτομέρειες | Details

White	**80203020**
Grey	**80203030**
Anthracite	**80203040**



Material	ABS & PC
Power	LED 10W
Dimming	No
Colour temperature	3000K | 4000K | 6000K
Lumen	1000
Classification	IP65
Dimensions	70 x 261 x 98 mm

26-17-00







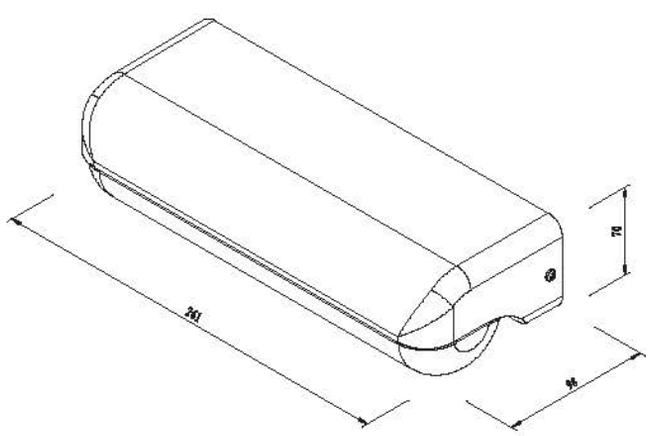

CRESCENT

Λεπτομέρειες | Details

White	**80206024**
Grey	**80206034**
Anthracite	**80206044**



Material	Aluminum
Voltage	220-240 V
Dimming	No
Classification	IP54
Dimensions	90 x 90 x 130 mm
Bulb	GU10

26-21-50

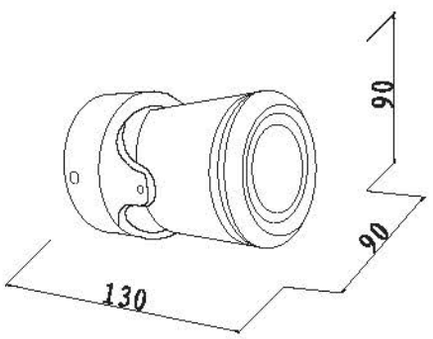





WILSON

Λεπτομέρειες | Details

White	**80202824**
Grey	**80202834**
Anthracite	**80202844**

Material	ABS & PC
Voltage	220-240 V
Classification	IP65
Dimensions	110 x 320 x 75 mm
Bulb	G9 (x2)

26-16-00

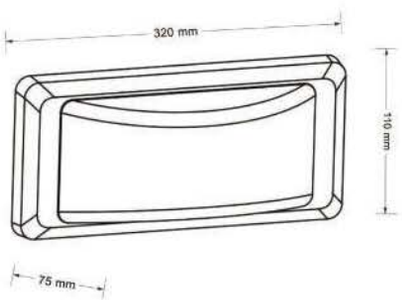









KLAMATH MEGA



Λεπτομέρειες | Details

White	**80301220**
Grey	**80301230**
Anthracite	**80301240**



Material	Plastic
Power	LED 48W
Dimming	No
Colour temperature	3000K | 4000K | 6000K
Lumen	3300
Classification	IP54
Dimensions	52 mm Ø400 mm

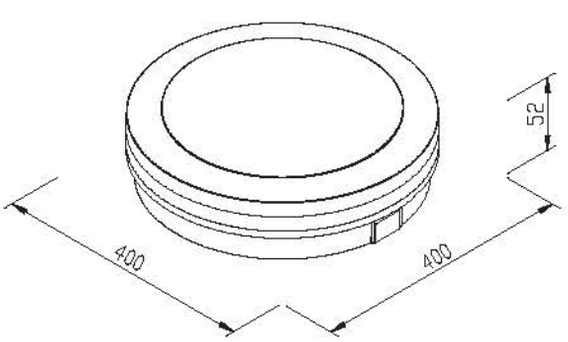

26-39-50



KLAMATH

Λεπτομέρειες | Details

White	**80301120**
Grey	**80301130**
Anthracite	**80301140**



Material	Plastic
Power	LED 36W
Dimming	No
Colour temperature	3000K | 4000K | 6000K
Lumen	2500
Classification	IP54
Dimensions	52 mm Ø300 mm

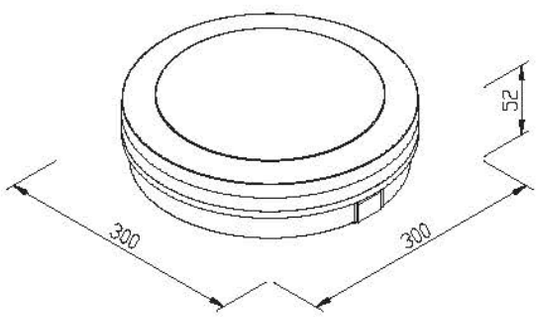

26-28-40

3000K 4000K 6000K 3CCT CHANGING COLOR





JOCASSEE

Λεπτομέρειες | Details

White	**80201420**
Grey	**80201430**
Anthracite	**80201440**

Material	ABS & PC
Power	LED 4W
Dimming	No
Colour temperature	3000K | 4000K | 6000K
Lumen	230
Classification	IP65
Dimensions	26 mm Ø148 mm



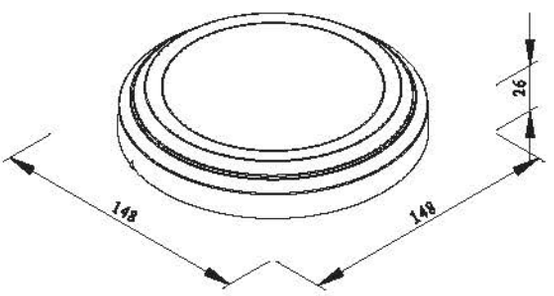

26-17-60







Λεπτομέρειες | Details

White	**80300220**
Grey	**80300230**
Anthracite	**80300240**



Material	ABS & PC
Power	LED 15W
Dimming	No
Colour temperature	3000K | 4000K | 6000K
Lumen	1800
Classification	IP65
Dimensions	60 mm Ø210 mm

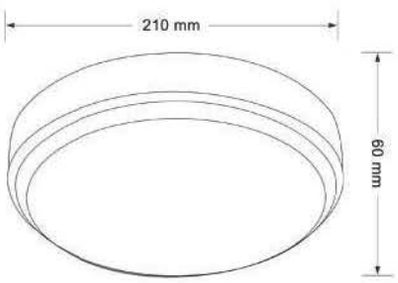

26-18-50







TORCH





Λεπτομέρειες | Details

White	**80300320**
Grey	**80300330**
Anthracite	**80300340**



Material	ABS & PC
Power	LED 18W
Dimming	No
Colour temperature	3000K | 4000K | 6000K
Lumen	2100
Classification	IP44
Dimensions	53 mm Ø280 mm

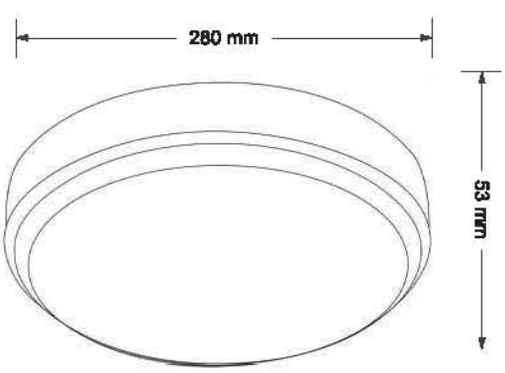

26-23-00

3CCT CHANGING COLOR

CHAMPLAIN

Λεπτομέρειες | Details

Grey	**80300834**
Anthracite	**80300844**



Material	PC
Voltage	220-240 V
Classification	IP65
Dimensions	90 x 285 x 285 mm
Bulb	E27

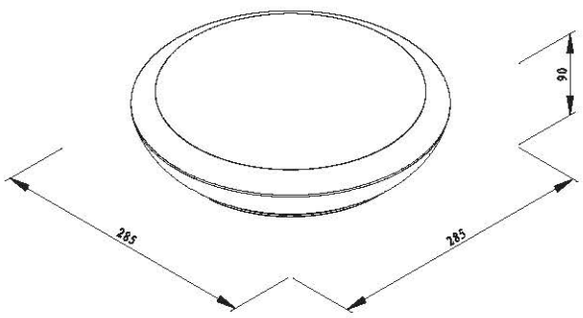

26-20-00





KEOWEE



Λεπτομέρειες | Details

Black **80400510**

Material	ABS & PC
Power	LED 12W
Dimming	No
Colour temperature	3000K | 4000K | 6000K
Lumen	600
Classification	IP65
Dimensions	180 x 180 x 600 mm

26-45-50



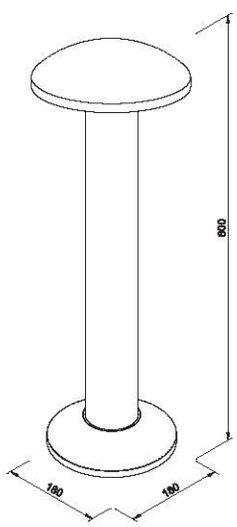



Λεπτομέρειες | Details

Black **80205210**



Material	ABS & PC
Power	LED 12W
Dimming	No
Colour temperature	3000K | 4000K | 6000K
Lumen	600
Classification	IP65
Dimensions	180 x 210 x 240 mm



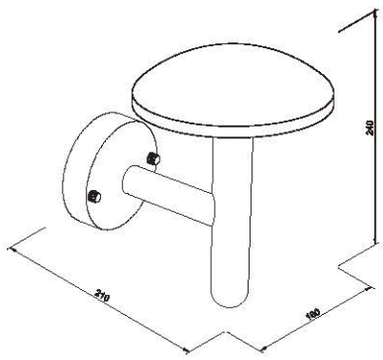

26-30-80



Λεπτομέρειες | Details

Black **80400910**

Material	Aluminum
Power	LED 7W
Dimming	No
Colour temperature	3000K | 4000K | 6000K
Lumen	320
Classification	IP65
Dimensions	130 x 196 x 600 mm

26-83-80

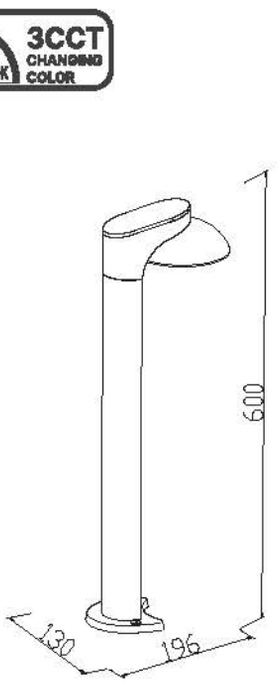





WABASH

Λεπτομέρειες | Details

Black **80208410**

Material	Aluminum
Power	LED 7W
Dimming	No
Colour temperature	3000K | 4000K | 6000K
Lumen	320
Classification	IP65
Dimensions	130 x 130 x 100 mm





26-49-30

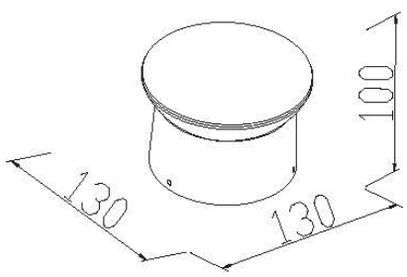

Λεπτομέρειες | Details

Black **80208310**

Material	Aluminum
Power	LED 7W
Dimming	No
Colour temperature	3000K | 4000K | 6000K
Lumen	320
Classification	IP65
Dimensions	130 x 200 x 195 mm



26-65-40

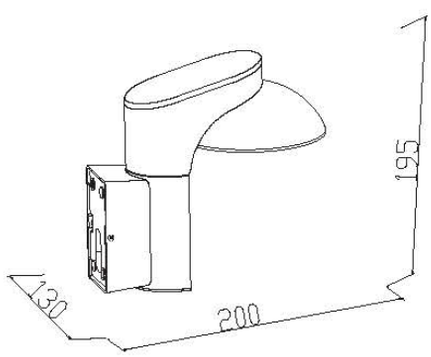

CANYON



Λεπτομέρειες | Details

Black **80206214**



Material	PC & PVC
Voltage	220-240 V
Classification	IP54
Dimensions	100 x 105 x 135 mm
Bulb	GU10

26-25-00

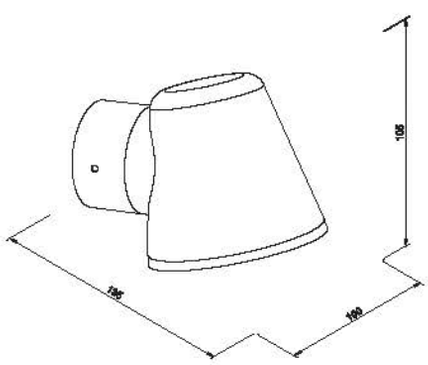

SHASTA

Λεπτομέρειες | Details

Black **80400714**

Material	PC & PVC
Voltage	220-240 V
Dimming	No
Classification	IP54
Dimensions	150 x 230 x 600 mm
Bulb	GU10

26-43-00

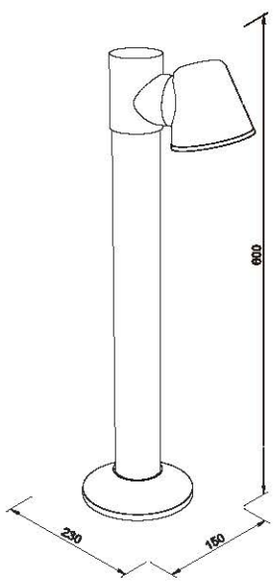



Λεπτομέρειες | Details

Black **80400814**

Material	PC & PVC
Voltage	220-240 V
Dimming	No
Classification	IP54
Dimensions	150 x 305 x 600 mm
Bulb	GU10 (x2)

26-53-00

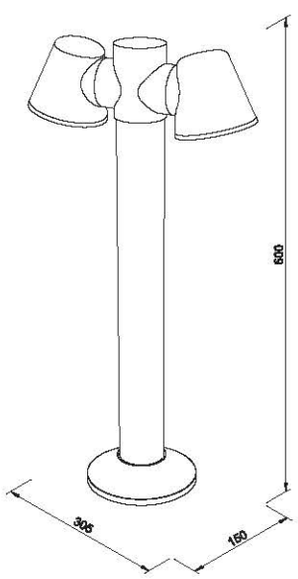





PUEBLO

Λεπτομέρειες | Details

Black **80400611**

Material	Aluminum
Power	LED 6W
Dimming	No
Colour temperature	3000K
Lumen	600
Classification	IP65
Dimensions	100 x 210 x 630 mm 50 x 175 x 820 mm

26-63-00



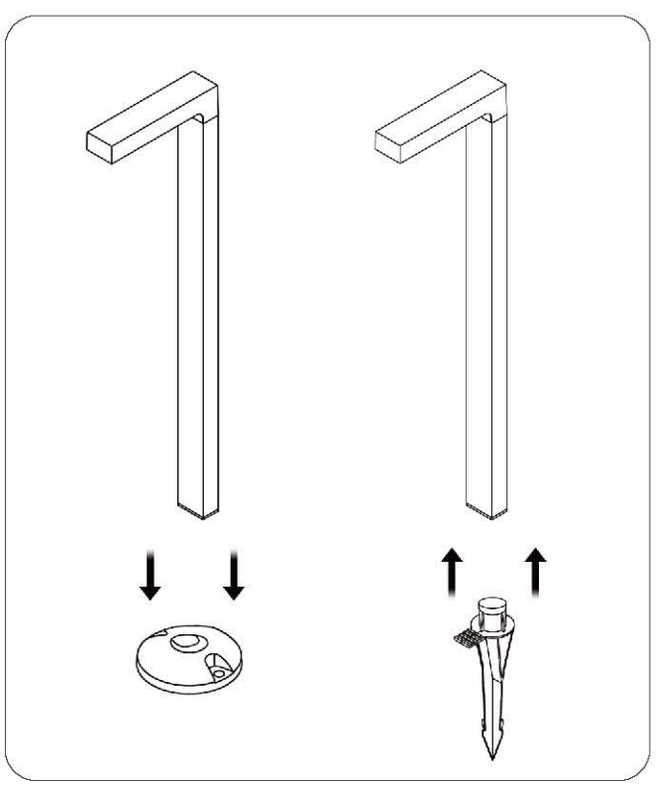

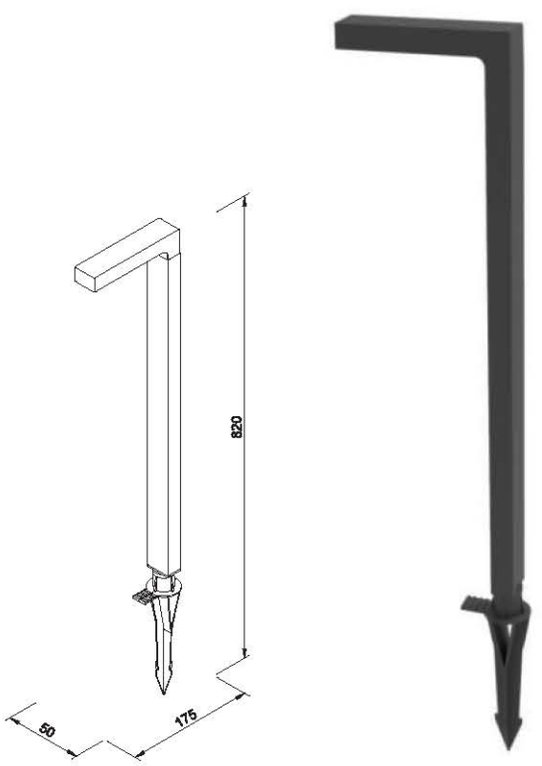

Λεπτομέρειες | Details

Black **80500114**

Material	ABS & PC
Voltage	220-240 V
Classification	IP44
Dimensions	190 x 190 x 1060 mm
Bulb	E27

26-33-50

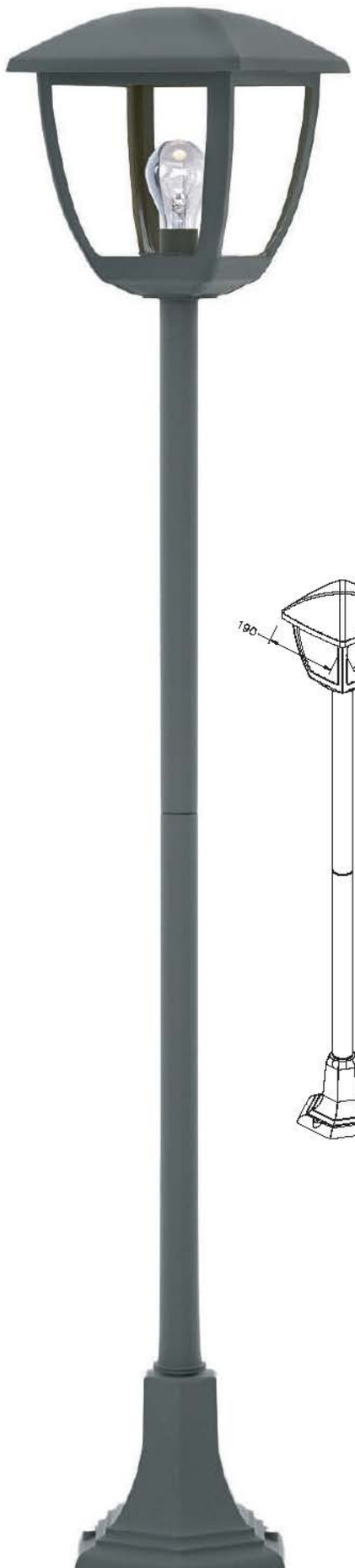



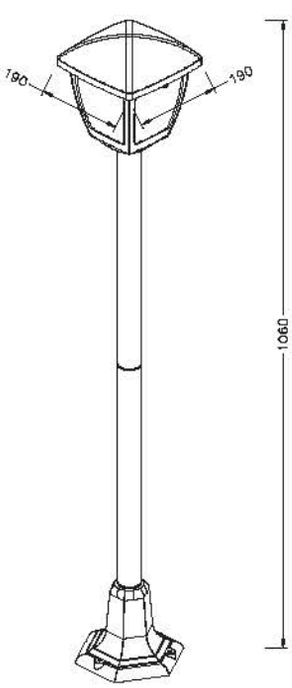

Λεπτομέρειες | Details

Black **80400214**

Material	ABS & PC
Voltage	220-240 V
Classification	IP44
Dimensions	190 x 190 x 358 mm
Bulb	E27

26-19-00

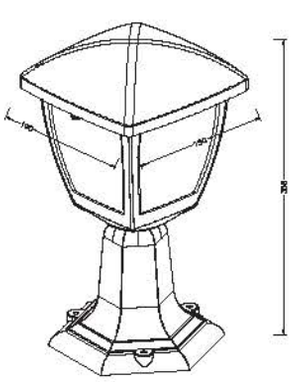

AVALANCHE

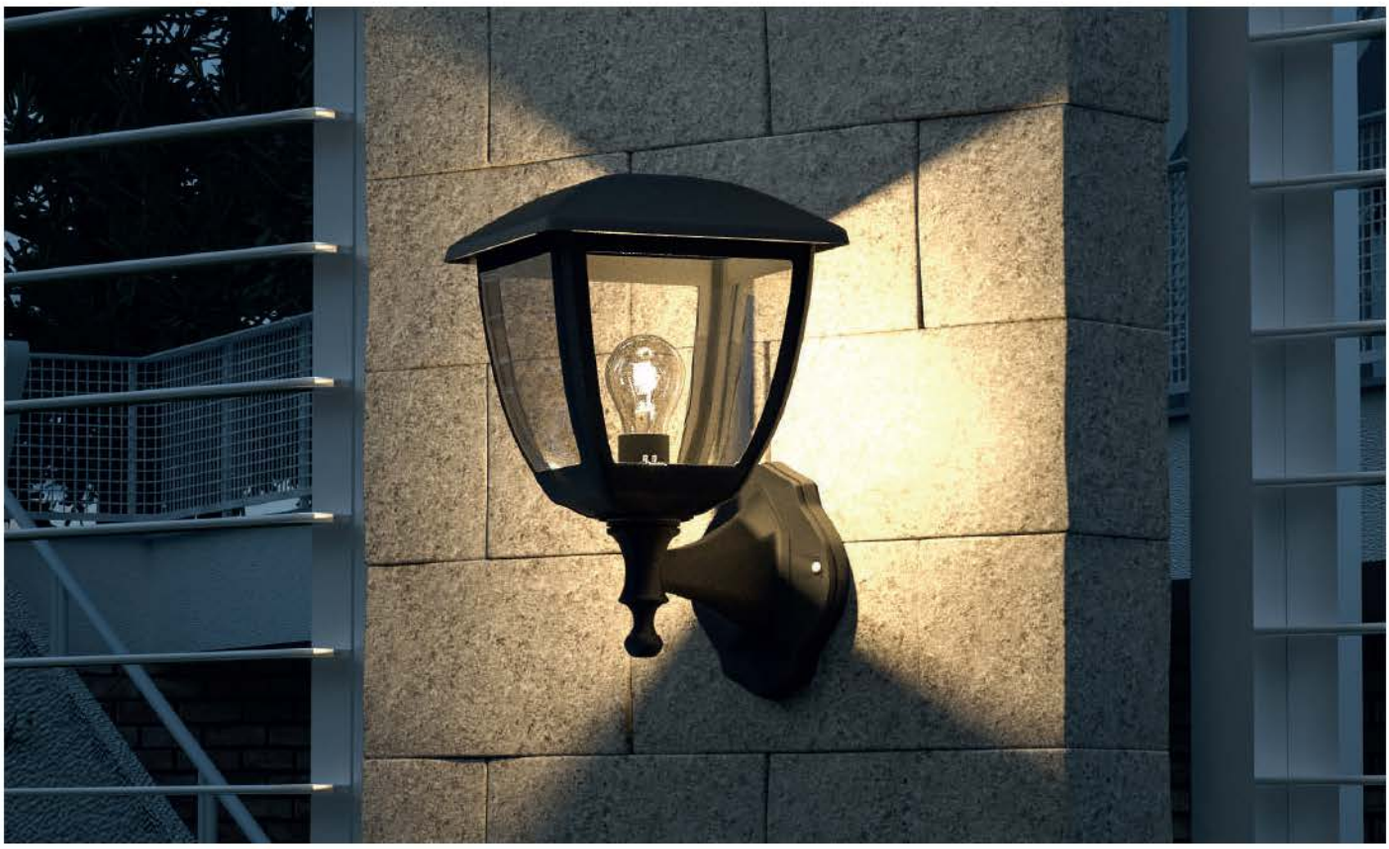

Λεπτομέρειες | Details

Black **80201214**



Material	ABS & PC
Voltage	220-240 V
Classification	IP44
Dimensions	185 x 220 x 300 mm
Bulb	E27

26-18-50

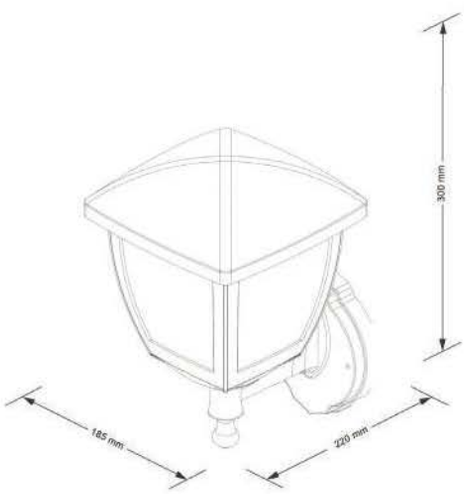

REDFISH



Λεπτομέρειες | Details

Black **80202614**

Material	ABS & PC
Voltage	220-240 V
Classification	IP44
Dimensions	187 x 237 x 360 mm
Bulb	E27



26-16-60

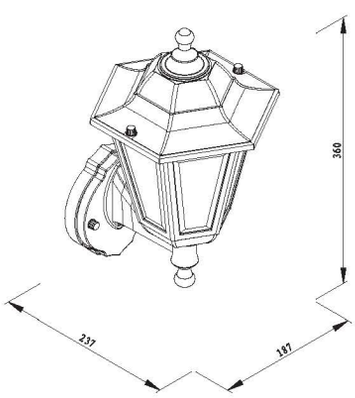





Λεπτομέρειες | Details

Black **80300114**

Material	ABS & PC
Voltage	220-240 V
Classification	IP44
Dimensions	215 x 1000 x 1370 mm Ø110 mm
Bulb	E27

25-22-00

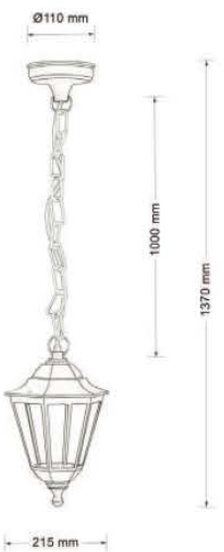

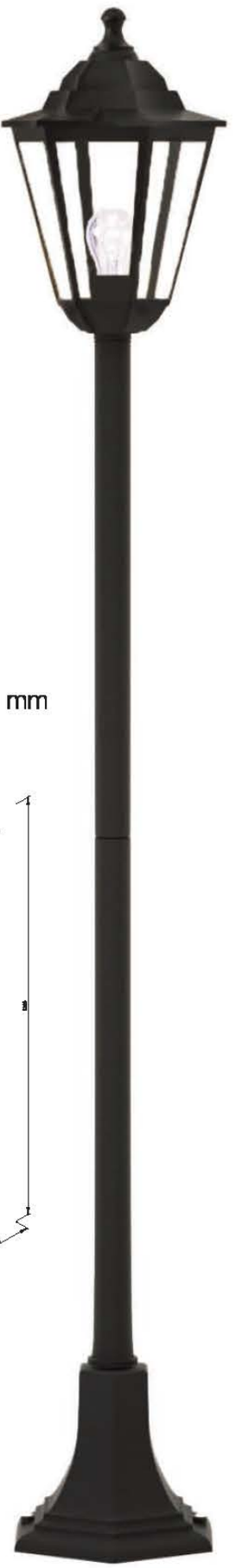

Λεπτομέρειες | Details

Black **80500214**

Material	ABS & PC
Voltage	220-240 V
Classification	IP44
Dimensions	187 x 216 x 1200 mm
Bulb	E27

26-29-00

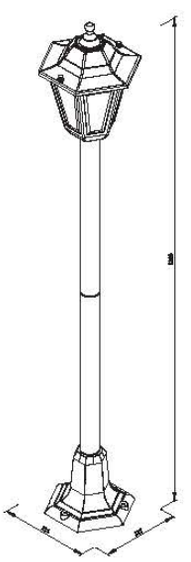

Λεπτομέρειες | Details

Black **80400314**

Material	ABS & PC
Voltage	220-240 V
Classification	IP44
Dimensions	187 x 216 x 416 mm
Bulb	E27

26-17-60





SHAFER



Λεπτομέρειες | Details

Anthracite **80600144**

Material	ABS & Glass
Voltage	220-240 V
Classification	IP65
Dimensions	115 x 180 x 270 mm
Bulb	GU10

26-11-50

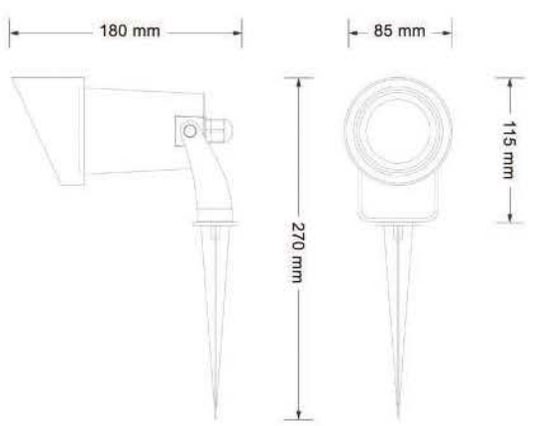





JAY



Λεπτομέρειες | Details

Anthracite **80600211**



Material	ABS & Tempered Glass
Power	LED 7W
Dimming	No
Colour temperature	3000K
Lumen	420
Classification	IP65
Dimensions	51 x 84 x 160 mm

26-11-00

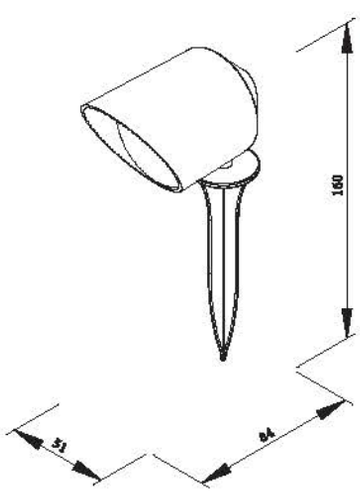

TENNESSEE

Λεπτομέρειες | Details

Black **80600611**

Material	Aluminum
Power	LED 15W
Dimming	No
Colour temperature	3000K
Classification	IP65
Dimensions	70 x 100 mm 210 mm

26-27-20

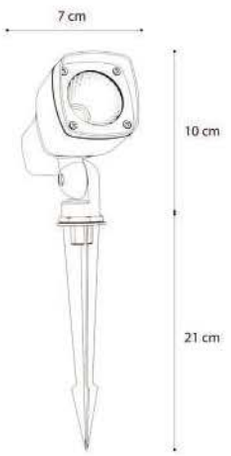





MERCURY



Λεπτομέρειες | Details

Black **80600514**

Material	Aluminum
Voltage	220-240 V
Classification	IP44
Dimensions	95 x 100 mm 150 mm
Bulb	GU10

26-15-50



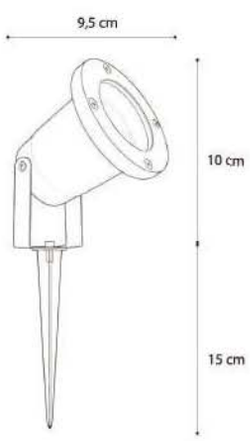



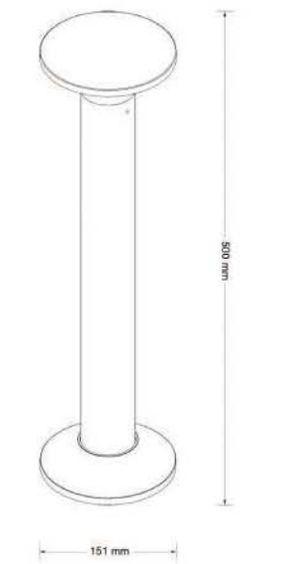

Λεπτομέρειες | Details

Anthracite **80400140**



Material	ABS & PC
Power	LED 12W
Dimming	No
Colour temperature	3000K | 4000K | 6000K
Lumen	1000
Classification	IP65
Dimensions	151 x 500 mm

26-45-50

ERLING



Λεπτομέρειες | Details

Black **80600314**

Material	ABS & PC
Voltage	220-240 V
Classification	IP65
Dimensions	62 x 140 x 250 mm
Bulb	GU10

26-14-90



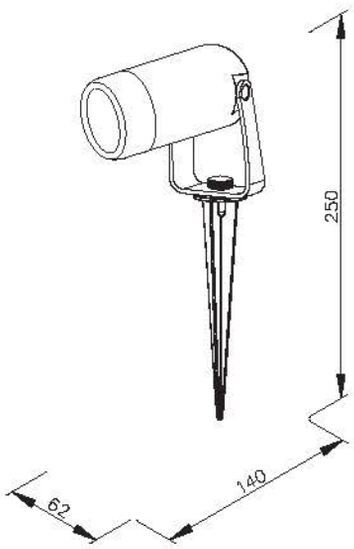

INDEX

Item number	Name	Page
80200124	Michigan	49
80200134	Michigan	49
80200144	Michigan	49
80200224	Powell	48
80200234	Powell	48
80200244	Powell	48
80200324	Havasu	57
80200334	Havasu	57
80200344	Havasu	57
80200424	Norman	56
80200434	Norman	56
80200444	Norman	56
80200524	Eklutna	54
80200534	Eklutna	54
80200544	Eklutna	54
80200624	Ouachita	55
80200634	Ouachita	55
80200644	Ouachita	55
80200720	Martin	66
80200730	Martin	66
80200740	Martin	66
80200820	Martin	65
80200830	Martin	65
80200840	Martin	65
80200921	Yellowstone	62
80200931	Yellowstone	62
80200941	Yellowstone	62
80201021	Lanier	63
80201031	Lanier	63
80201041	Lanier	63
80201120	Geneva	71
80201130	Geneva	71
80201140	Geneva	71
80201214	Avalanche	95
80201320	Willoughby	47
80201330	Willoughby	47
80201340	Willoughby	47
80201420	Jocassee	82
80201430	Jocassee	82
80201440	Jocassee	82
80201520	George	46
80201530	George	46
80201540	George	46
80201620	Maroon	42
80201630	Maroon	42
80201640	Maroon	42
80201720	Mono	45
80201730	Mono	45
80201740	Mono	45
80201820	Salmon	44
80201830	Salmon	44
80201840	Salmon	44
80201920	Horseshoe	43
80201930	Horseshoe	43
80201940	Horseshoe	43
80202020	Kentucky	40
80202030	Kentucky	40
80202040	Kentucky	40
80202120	Blue	39
80202130	Blue	39
80202140	Blue	39
80202220	Blue	38
80202230	Blue	38
80202240	Blue	38
80202320	Blue	38
80202330	Blue	38
80202340	Blue	38
80202420	Silver	41
80202430	Silver	41
80202440	Silver	41
80202514	Rabun	72
80202524	Rabun	72
80202614	Redfish	96
80202724	Clear	75
80202734	Clear	75
80202744	Clear	75
80202824	Wilson	79
80202834	Wilson	79
80202844	Wilson	79
80202920	Echo	76
80202930	Echo	76
80202940	Echo	76
80203020	Erie	77
80203030	Erie	77
80203040	Erie	77
80203121	Emerald	67
80203131	Emerald	67
80203141	Emerald	67
80203240	Athabasca	29
80203340	Louise	28
80203424	Winnipeg	51
80203434	Winnipeg	51
80203444	Winnipeg	51
80203520	Flathead	37
80203530	Flathead	37
80203540	Flathead	37
80203624	Wildwood	74
80203634	Wildwood	74
80203644	Wildwood	74
80203724	Candler	50
80203734	Candler	50
80203744	Candler	50
80203824	Elarbee	59
80203834	Elarbee	59
80203844	Elarbee	59
80203924	Palmyra	58
80203934	Palmyra	58
80203944	Palmyra	58
80204020	Caror	34
80204030	Caror	34
80204040	Caror	34
80204120	Niskey	36
80204130	Niskey	36
80204140	Niskey	36
80204810 S	Renada	34
80204910 S	Melville	15
80205210	Amistad	87
80301050	Calenia	26

Item number	Name	Page
80205314	Evelyn	68
80205414	Winona	35
80205511	Isabella	31
80205614	Zar	30
80205711	Allatoona	24
80205811	Folsom	25
80205911	Barton	25
80206024	Crescent	78
80206034	Crescent	78
80206044	Crescent	78
80206114	Annie	33
80206214	Canyon	90
80206320	Gio	64
80206330	Gio	64
80206340	Gio	64
80206611 S	Narlay	13
80206711 S	Juniper	13
80206810 S	Moon	10
80206910 S	Annecy	11
80207011 S	Meribel	11
80207111S	Teal	12
80207211S	Tortolse	14
80207310S	Baikal	08
80207410	Redwood	73
80207540	Oneida	27
80207620	Geneva Mega	70
80207630	Geneva Mega	70
80207640	Geneva Mega	70
80208310	Wabash	89
80208410	Wabash	89
80300114	Redfish	97
80300124	Chelan	53
80300134	Chelan	53
80300144	Chelan	53
80300220	Echo	83
80300230	Echo	83
80300240	Echo	83
80300320	Torch	84
80300330	Torch	84
80300340	Torch	84
80300524	Reindeer	52
80300534	Reindeer	52
80300544	Reindeer	52
80300624	Cowart	61
80300634	Cowart	61
80300644	Cowart	61
80300834	Champlain	85
80300844	Champlain	85
80300914	Evelyn	69
80301024	Monument	60
80301034	Monument	60
80301044	Monument	60
80301120	Klamath	81
80301130	Klamath	81
80301140	Klamath	81
80301220	Klamath Mega	80
80301230	Klamath Mega	80
80301240	Klamath Mega	80
80400140	Geneva	102
80400214	Avalanche	94
80400314	Redfish	97
80400414	Caddo	32
80400510	Keowee	86
80400611	Pueblo	93
80400714	Shasta	91
80400814	Shasta	91
80400910	Wabash	88
80500114	Avalanche	94
80500214	Redfish	97
80600144	Shafer	98
80600211	Jay	99
80600314	Erling	103
80600514	Mercury	101
80600611	Tennessee	100
80700115	Acadia Mini	18
80700215	Acadia	19
80700315	Acadia Mega	19
80700415	Crest Peak	21
80700515	Crest Range	21
80206810 S	Flow	10

LiGHTING

www.it-lighting.eu

Distributed by:
MORAITIS LIGHTS S.A

46 Othonos Str, 17343, Athens Greece
+30 210 9760472 - +30 2109702003

Contact Information:
info@moraitis.com
Orders: sales@moraitis.com / orders@moraitis.com
Accounting: accounting@morairis.com

Bank Details:
National Bank of Greece: 11547027943
IBAN:GR5101101150000011547027943

Piraeus Bank: 6555147497354
IBAN:GR9601715550006555147497354

Alpha Bank: 156002002014154
IBAN:GR1401401560156002002014154

Eurobank: 00260008370201617581
BAN:GR0702600080000370201617581